SREDStakeholder.CA

Webcast

Mar 25, 2021

©Note: All content may be reproduced as long as it acknowledges SREDStakeholder.CA as the source

TIME	WEBCAST AGENDA	LINKED CONTENT	PRESENTERS
(EST)			
1:00 PM	INTRODUCTION		Earl Viner
1:05 PM	I) SR&ED by Medical Corps	Dr. Lamy Judgment & Effects	David Sabina
1:35 PM		Questions & Comments	Moderators
1:40 PM	II) Technological Advancement (TA)	Patent Judgments on TA	Ben Mak
2:10 PM		Questions & Comments	Moderators
2:15 PM	III) SR&ED Tax Cases	2021 Judgments – 2 losses	Elizabeth Lance
2:50 PM		Questions & Comments	Moderators
3:00 PM	IV) CRA SR&ED News	Statistics & Covid effects	Justin Frape
3:15 PM		Questions & Comments	Moderators
3:20 PM	V) Tax Court Strategies in Covid	Rules for Video Hearings	Angela Salvatore
3:40 PM		Questions & Comments	Moderators
3:55 PM	CLOSING REMARKS		Earl Viner

SR&ED Practitioner Meeting
Medical Professional Corps (MPC's)
Mar 25, 2021

SREDStakeholder.CA

Presented by

David Sabina, CPA,

Director, MEUK Corporation

Agenda

- **SR&ED – issues for Medical Professional Corporations (MPC's)**
- presented 2016 - 2020 – partially resolved
  - **1) AFP/APP funding effects – IN PROCESS**
  - **2) Directly Engaged / Undertaken - RESOLVED?**
  - **3) Length of time for objections - RESOLVED**
  - **4) Consistency of rulings across Canada - RESOLVED**
- New issues raised during 2018 & 2019
  - **5) Proving involvement with protocols - ADDRESSED**

SREDStakeholder.CA

SR&ED Medical Issues – in contention with CRA 2016 – 2021

		2021	2020	2019	2017	2016
1	AFP / APP funding as assistance Portion related to SR&ED?	?	PDF Video	PDF Video	PDF Video	PDF Video
2	Directly engaged / entitlement to exploit Doctor vs. MPC?	Dr. Lamy case	PDF Video	PDF Video	PDF Video	PDF Video
3	Contract eligibility tips	CRA 2019 guidance	PDF	PDF Video		
4	Proving input on protocols	Dr. Lamy case	PDF	PDF Video		
5	Speed of appeals (Objections > 4 years +)	Resolved?	PDF	PDF Video		

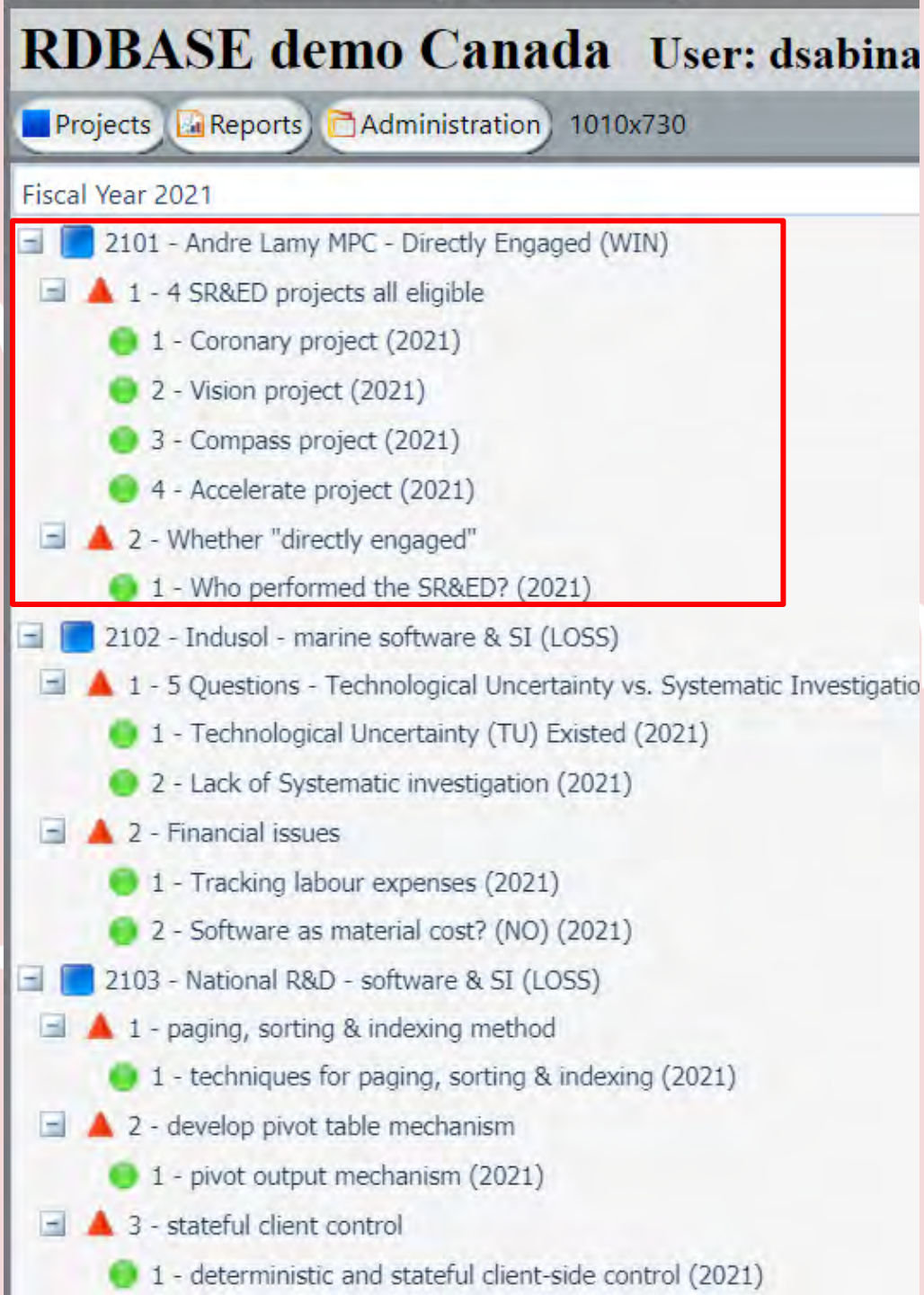

3 SR&ED cases 2021

"demo" login

WWW.RDBASE.CA

Dr. Lamy MPC Case analyzed using

"key criteria"

&

"project description"

reports.

Review then apply to Medical issues

The RDBASE project



OBJECTIVES > STANDARD PRACTICE	IDENTIFY
STATE of EXISTING KNOWLEDGE	BENCHMARKING SOURCES
OBJECTIVES	BENCHMARKS VS. OBJECTIVES



UNCERTAINTIES & HYPOTHESES	VARIABLES for EXPERIMENTATION



EXPERIMENTS	CORRELATE
RESULTS	OBJECTIVES
CONCLUSIONS	VARIABLES

Key Criteria Summary

2101 - Andre Lamy MPC - Directly Engaged (WIN)			
BENCHMARKS	**ACTIVITIES BY YEAR**		
Competitive products or processes: 56 products	2021		
In-house technologies: 5 products / processes	'1-1	'2-1	'3-1
Queries to experts: 12 responses	Coronary project	Compass - effects Rivaroxaban	Who performed the SR&ED?
OBJECTIVES	**RESULTS**		
On pump primary composite outcome CABG: 13 %	13.3		
Off pump primary composite outcome CABG: 13 %	12.1		
On pump repeat coronary revascularization: 0.5 %	0.8		
Off pump repeat coronary revascularization: 0.5 %	1.4		
UNCERTAINTIES & KEY VARIABLES	**CONCLUSIONS**		
1 - Coronary project - on vs. off pump factors			
Cerebrovascular disease	Y		
Effect of diabetes	Y		
Euroscore	Y		
Left ventricular function: Grade 1 to 4	Y		
Number of vessels diseased	Y		
2 - Compass project			
factors affecting Rivaroxaban		Y	
3 - Whether "directly engaged"			
No			
Yes			Y
	METHODS		
Analysis	2		
Trials	4752	27000	
Prototypes			
Lines of code			
	COSTS		
Hours	500	180	
Materials $			
Subcontractor $			

Project Name:	Andre Lamy MPC - Directly Engaged (WIN)	**Start Date:**	2021-01-01
Project Number:	2101	**Completion Date:**	2021-04-30

Project Details:

Scientific or Technological Objectives:

Measurement	Current Performance	Objective	Has results?
On pump primary composite outcome CABG (%)	12.5	13	Yes
Off pump primary composite outcome CABG (%)	12	13	Yes
On pump repeat coronary revascularization (%)	1	0.5	Yes
Off pump repeat coronary revascularization (%)	1	0.5	Yes

This project example is based on the Tax Court of Canada judgment for Andre Lamy Medicine Professional Corporation v. The Queen (2020 TCC 61).

STATEMENT OF AGREED FACTS

1, The Appellant was a corporation located in Ontario.

2. The Appellant was incorporated on June 23, 2008.

3. Dr. Lamy was the Director, President and Secretary of the Appellant.

4. The Appellant was the medical professional corporation of Dr. Lamy and carried on the business of performing cardiac surgery, providing associated medical care to patients and researching improvements in cardiac surgical methodology and clinical [outcomes].

5. Dr. Lamy was also employed as a Professor of the Faculty of Health Sciences at McMaster University where his teaching duties included lecturing on research methodology and the inclusion of students in cardiac surgery.

6. During the 2013 and 2014 taxation years, Dr. Lamy was involved in experimental projects relating to advancements in cardiac surgical techniques and treatments.

There were two studies known as

the Vision study, that included projects referred to throughout as "Vision" and "Coronary", and

the Compass study, that included projects referred to throughout as "Compass" and "Accelerate" (the “Projects").

[NOTE: CRA CONCEDED ELIGIBILITY OF VISION AND ACCELERATE PROJECTS]

8. Careful SRED time tracking dockets were kept as required, and detailed representations and information packages regarding the Projects were prepared.

9. SRED tax credits for its 2013 and 2014 taxation years in the amounts of $93,828.00 and $107,642.00, respectivelY.

10. The Research Agreements leading to the Projects were signed by Dr. Lamy without noting his capacity as director of the Appellant.

ll. Dr. Lamy was not required by his employment agreement with McMaster University to undertake research within the meaning of subsection 248(1) of the Act.

21. During the 2013 and 2014 taxation years, Dr. Lamy spent approximately 52 to 57 per cent of his time working on these four projects. He testified that he conducted all of his research as an employee of the Appellant.

The largest project (Coronary) involved developing and comparing techniques for Coronary Artery Bypass Grafting (CABG) with or without a pump. WE WILL USE THE FACTS OF THIS PROJECT FOR THIS EXAMPLE.

PROJECT PROTOCOLS:
In a recent survey of Canadian heart surgeons, Desai et al reported that a majority of surgeons believe that off-pump CABG improves clinical outcomes but concerns regarding incomplete revascularization, technical demands and the lack of proven clinical benefits have limited the routine performance of off-pump CABG in Canada.

Many investigators have indicated an urgent need for a large scale RCT of off-pump CABG vs. on-pump CABG with a long-term follow-up. A recent Scientific Statement from the American Heart Association and recommendations from the National Heart, Lung, and Blood Institute Working Group have reiterated the need for a,

“large, multicenter, randomized clinical trial to compare the procedures and the effect of CABG on neurocognition, renal failure, infection, and blood requirements, as well as to explore other questions”.

1.1 Study Objectives

Primary: In patients undergoing CABG surgery, does off-pump CABG surgery compared to on-pump CABG surgery reduce major clinical vascular events in the short term (30 days) and are the benefits maintained at long term (5 years)? The primary outcome at 30 days is total mortality, stroke, MI and new renal failure requiring dialysis and at 5 years, the same outcomes plus repeat revascularization.

We are therefore proposing a large multicentre international randomized trial with long term follow-up to provide definite answers to a clinically important question.We have two co-primary outcomes:

The first co-primary outcome is the occurrence of the composite of total mortality, stroke, nonfatal MI, or new renal failure at 30 days post randomization (randomization = day 1).

The second co-primary outcome is the occurrence of the composite of total mortality, stroke, nonfatal MI, new renal failure, or repeat coronary revascularization (i.e. coronary artery bypass surgery or percutaneous coronary intervention) over 5 years after randomization.

Secondary: In patients undergoing CABG surgery, does off-pump CABG surgery compared to on-pump CABG surgery reduce costs in the short term (30 days) and at long term (5 years) (cost-effectiveness analysis)?

Field of Science/Technology:

Cardiac and cardiovascular systems (3.02.04)

Project Details:

Intended Results:	Develop new processes
Work locations:	Research Facility
Key Employees:	Andre Lamy (Cariothoracic surgery - MD,PhD (2000) / Surgeon)
Evidence types:	Design of experiments; Records of trial runs; Progress reports, minutes of project meetings; Test protocols, test data, analysis of test results, conclusions; Records of resources allocated to the project, time sheets; Samples, prototypes, scrap or other artefacts; Project records, laboratory notebooks; Project planning documents

Scientific or Technological Advancement:

Uncertainty #1: Coronary project - on vs. off pump factors

All of the projects themselves were deemed eligible from a technology perspective.

The CRA's challenges instead related to the issues of whether Dr. Lamy was;

1) performing SR&ED in role as Principal Investigator on projects sponsored by other companies &

2) "directly" vs. "indirectly" engaged on each project.

The following is a brief summary of the uncertainties related to the largest project (Coronary) reproduced from the actual protocols as published:

For the second co-primary outcome at 5 years, it is more difficult to predict if the treatment effect will follow a proportional hazard model or not (an earlier benefit from off-pump CABG could be lost at long term with an excess in re-revascularization per example).

If the proportional hazards assumption holds for outcomes at 5 years, we will proceed as described with the first co-primary outcome above. If the proportional hazards assumption does not hold for outcomes at 5 years, we will fit a Cox model with an extra time-dependent covariate, which is the interaction term between the treatment and the survival time. This time-varying treatment effect will also be examined by the Aalen's additive hazards model.

This type of model will allow the risk to be estimated within discrete time periods to further describe the difference due to treatment group. Participants who prematurely discontinue follow-up before a major cardiovascular event will be censored as to their last follow-up data.

In secondary analyses we will compare the incidence of each of the individual major cardiovascular events (total mortality, stroke, nonfatal MI, new renal dialysis) and revascularization procedures (i.e. coronary artery bypass surgery and percutaneous coronary intervention) using the same strategy.

We will be testing hypotheses for two co-primary outcomes which are correlated with each other. An adjustment to the a level for each of the two tests of the co-primary outcomes is needed. The a level for the test of the first co-primary outcome (0.048) was determined through 10,000,000 simulations while fixing the a level for the test of the second co-primary outcome at 0.01.

APPENDIX A
Protocol Subgroups
-Diabetes
-Cerebrovascular disease
-Peripheral arterial disease
-Left ventricular function: Grade 1 to 4
-Number of vessels diseased: left main, single, double, or triple
-Gender:M/F
-Age: <70 years old, =70 years old
-Euroscore: into 3 groups i.e. 0 to 2, 3 to 5 & >5

The most significant underlying key variables are:

Effect of diabetes, Cerebrovascular disease, Left ventricular function: Grade 1 to 4, Number of vessels diseased, Euroscore

Technology or Knowledge Base Level:

Benchmarking methods & sources for citings:

Benchmark Method/Source	Measurement	Explanatory notes
Competitive products or processes	56 products	https://www.nejm.org/doi/suppl/10.1056/NEJMoa1301228/suppl_file/nejmoa1301228_protocol.pdf These protocols cite 56 other studies relating to variables in the design of the study.
Similar prior in-house technologies	5 products / processes	Dr. Lamy has published peer reviewed papers regarding the states of Coronary project technology. Original invesitagations began 2007.
Queries to experts	12 responses	12 other specialists listed in protocol development

Activity #1-1: Coronary project (Fiscal Year 2021)

Methods of experimentation:

Method	Experimentation Performed
Analysis / simulation:	2 alternatives
Trials:	4752 runs / samples

Improve Coronary Artery Bypass Grafting techniques:

[17] With respect to the Coronary Project, he testified that it related to bypass surgery. He referred to two techniques that are used when conducting bypass surgery.

One is called a cardiopulmonary bypass, or the pump. This involves stopping the heart while the bypass is performed.

The second technique is called off-pump. A pump is not used and the bypass is performed while the heart is beating.

Dr. Lamy noted that there was much discussion in the medical community with respect to which technique is better. As a result, he decided that he would try to answer that question by starting the Coronary Project.

He has been working on the project for ten years and it is not yet completed. He worked on this project during the 2013 and 2014 taxation years.

ADDITIONAL DETAILS FROM INTERNET: PUBLISHED REPORT 2013

Background: Previously, we reported that there was no significant difference at 30 days in the rate of a primary composite outcome of death, myocardial infarction, stroke, or new renal failure requiring dialysis between patients who underwent coronary-artery bypass grafting (CABG) performed with a beating-heart technique (off-pump) and those who underwent CABG performed with cardiopulmonary bypass (on-pump).

Results:

- On pump primary composite outcome CABG: 13.3 % (160% of goal)
- Off pump primary composite outcome CABG: 12.1 % (10% of goal)
- On pump repeat coronary revascularization: 0.8 % (40% of goal)
- Off pump repeat coronary revascularization: 1.4 % (no improvement)

ADDITIONAL DETAILS FROM INTERNET:

Dr. Lamy's most significant contribution in cardiac surgery is the CORONARY trial for which he received a large grant from the Canadian Institute of Health Research in 2007.

CORONARY is a large multi centred randomized trial of off-pump CABG surgery versus on-pump CABG surgery. CORONARY has recruited and randomized 4,752 patients from 79 centres in 19 countries.

The results were presented at the Late Breaking Clinical Trials at the American College of Cardiology meeting in 2012 and 2013 and were published in the New England Journal of Medicine in 2012 and 2013.

The trial recently finished with a follow-up of five years. These final results were published in the New England Journal of Medicine October 2016.

ADDITIONAL DETAILS FROM INTERNET: PUBLISHED REPORT 2013

Results: At 1 year, there was no significant difference in the rate of the primary composite outcome between off-pump and on-pump CABG (12.1% and 13.3%, respectively; hazard ratio with off-pump CABG, 0.91; 95% confidence interval [CI], 0.77 to 1.07; P=0.24).

The rate of the primary outcome was also similar in the two groups in the period between 31 days and 1 year (hazard ratio, 0.79; 95% CI, 0.55 to 1.13; P=0.19).

The rate of repeat coronary revascularization at 1 year was 1.4% in the off-pump group and 0.8% in the on-pump group (hazard ratio, 1.66; 95% CI, 0.95 to 2.89; P=0.07).

There were no significant differences between the two groups at 1 year in measures of quality of life or neurocognitive function.

Conclusion:

[47] [the CRA conceded eligibility of the] Vision and Accelerate Projects.

However, the Respondent (CRA) argues that the documents provided with respect to the Coronary Project and the Compass Project are not consistent with a factual finding that the Appellant performed the SR&ED.

I (the judge) do not agree.

CONCLUSIONS - DETAILS FROM INTERNET: PUBLISHED REPORTS 2013 & 2016

Conclusions: At 1 year after CABG, there was no significant difference between off-pump and onpump CABG with respect to the primary composite outcome, the rate of repeat coronary revascularization, quality of life, or neurocognitive function.

In our trial, the rate of the composite outcome of death, stroke, myocardial infarction, renal failure, or repeat revascularization at 5 years of follow-up was similar among patients who underwent off-pump CABG and those who underwent on-pump CABG.

AUTHOR'S NOTE:

BECAUSE THE PROJECT WAS SPONSORED BY ANOTHER PARTY (CANADIAN INSTITUTE FOR HEALTH RESEARCH) THE CRA SCRUTINIZED WHETHER THE SPONSOR OR DR. LAMY WAS CONDUCTING THE SR&ED. IN THIS CASE HE APPEARED TO HAVE BEEN THE PRIMARY DESIGNER OF THE PROTOCOLS.

Significant variables addressed: Cerebrovascular disease, Effect of diabetes, Euroscore, Left ventricular function: Grade 1 to 4, Number of vessels diseased

Documentation:

Uploaded to RDBASE.NET: Dr. Andre Lamy Published reports on Coronary Project.pdf (153KB), Andre Lamy MPC SRED Tax ruling -WIN Directly Engaged.pdf (202KB), Effects of off-pump and on-pump coronary-artery bypass grafting at 1 year - PubMed.pdf (85.2KB)

Offline Documents: docs

Uncertainty #2: Compass project

The most significant underlying key variables are:

factors affecting Rivaroxaban

Technology or Knowledge Base Level:

Activity #2-1: Compass - effects Rivaroxaban on cardiac patients (Fiscal Year 2021)

Methods of experimentation:

Method	Experimentation Performed
Trials:	27000 runs / samples

[19] The Compass Project is a large trial project. Dr. Lamy was involved in a small portion of the project; that portion involved testing the medication Rivaroxaban with certain patients.

Dr. Lamy noted this his involvement related to the small portion of the test population who had undergone cardiac surgery. He worked on the project during the 2013 and 2014 taxation years and continues to work on the project today.

[28]Compass Project (the “Compass Letter of Understanding”). The letter is signed by the Hamilton Health Sciences Corporation (identified in the letter as “HHSC”) and Dr. Lamy.

The purpose of the Compass Letter of Understanding appears to be to discuss HHSC’s and Dr. Lamy’s role in the Compass Project, which was sponsored and funded by Bayer Healthcare AG. Dr. Lamy noted that worldwide there were approximately 27,000 patients who participated in the Compass Project.

[29] The letter states that Bayer Healthcare AG has authorized Bayer Inc., a corporation with an address in Toronto, to act on its behalf regarding all matters related to the conduct of the study in Canada.

[30] The Compass Letter of Understanding indicates that Bayer Inc. has entered into a clinical trial service agreement with HHSC, pursuant to which HHSC is to manage the Compass Project, including supervising the investigators.

The letter refers to Dr. Lamy as being the “Principal Investigator.” In his testimony, Dr. Lamy clarified that there were approximately 600 investigators involved in the Compass Project and that he was the local Principal Investigator, meaning he was the Principal Investigator for the patients in the Hamilton hospital.

[31] It appears that the role of the Principal Investigator was to pre-screen patients and then recruit qualifying patients for the project.

Appendix A states that the Principal Investigator shall carry out the “Study Activity”. The Compass Letter of Understanding does not explain this term. It appears to relate to activities HHSC was required to perform under its agreement with Bayer Inc. I was not provided with a copy of that agreement.

[AUTHOR'S NOTE: THIS TYPE OF INFORMATION WILL BE RELEVANT IN HELPING THE JUDGE ASSESS DR. LAMY'S INVOLVEMENT IN THE PROTOCOL DESIGN. GIVEN THE SUCCESSFUL RESULT WE WILL ASSUME IT IS SIMILAR TO THE CORONARY PROJECT.]

[32] On the second page of the Compass Letter of Understanding it is stated that HHSC, on behalf of Bayer Inc., shall pay Dr. Lamy for the services provided in accordance with Appendix B to the letter of understanding.

Dr. Lamy testified that HHSC did not pay any amounts to either him or the Appellant in respect of the Compass Project. The only monies he received were the amounts paid to him by the Appellant as salary.

[AUTHOR'S NOTE: PAYMENTS FOR THE RESEARCH FROM ANOTHER CANADIAN COMPANY MAY BE "CONTRACT PAYMENTS" TO REDUCE ELIGIBLE SR&ED.]

Results:

THE CASE DID NOT PROVIDE SPECIFIC DETAILS ON THIS PROJECT. SINCE IT WAS SPONSORED BY A PRIVATE COMPANY (BAYER) THE RESULTS ARE NOT PUBLIC.

Conclusion:

[47] [the CRA conceded eligibility of the] Vision and Accelerate Projects.

However, the Respondent (CRA) argues that the documents provided with respect to the Coronary Project and the Compass Project are not consistent with a factual finding that the Appellant performed the SR&ED.

I (the judge) do not agree.

[AUTHOR'S NOTE: BECAUSE THE PROJECT WAS SPONSORED BY ANOTHER PARTY (I.E. BAYER PHARMACEUTICAL COMPANY / RIVAROBAXIN PRODUCER) THE CRA SCRUTINIZED WHETHER THE SPONSOR OR DR. LAMY WAS CONDUCTING THE SR&ED.

IN SUCH CASES IT IS IMPORTANT TO OUTLINE HOW;

- THE PERFORMER (DR. LAMY) PROVIDED INPUT INTO THE PROTOCOL DESIGN ITSELF VS.
- JUST PROVIDING DATA FOR THE SPONSOR TO INTERPRET & ANALYZE.]

Significant variables addressed: factors affecting Rivaroxaban

Uncertainty #3: Whether "directly engaged"

The most significant underlying key variables are:

Yes, No (unresolved)

Technology or Knowledge Base Level:

Activity #3-1: Who performed the SR&ED? (Fiscal Year 2021)

Methods of experimentation:

The court examined contracts related to 2 of the projects.

[34] Dr. Lamy testified that he signed the Coronary Agreement and the Compass Letter of Understanding in his capacity as an employee of the Appellant, since he provided the services specified in the agreement and the Compass Letter of Understanding as an employee of the Appellant.

[36] As I noted previously, the issue before the Court is whether the Appellant carried out the SR&ED or whether Dr. Lamy conducted such research in his personal capacity. This is a question of fact.

[37] The Respondent (CRA) presented no witnesses in support of her factual conclusion that Dr. Lamy carried out the SR&ED

in his personal capacity.

The only subparagraphs that support the Minister's argument that Dr. Lamy, and not the Appellant, conducted the SR&ED are subparagraphs 10 e) and f) of the Reply. These subparagraphs contain the following factual conclusions:

e) the SR&ED in question was undertaken by Dr. Lamy in his personal capacity; and

f) the SR&ED in question was not undertaken directly by the Appellant nor on behalf of the Appellant by Dr. Lamy.

[38] The Reply does not contain any assumptions of fact made by the Minister that support these two factual conclusions.

As a result, I will base my decision on the relevant evidence before me, namely, the testimony of Dr. Lamy, the admissions made by the parties, the facts contained in the SAF and three of the documents included in Exhibit AR-1.

[52] That it was Dr. Lamy who signed the Coronary Agreement and the Compass Letter of Understanding does not change the fact that he performed the research activities as an employee of the Appellant.

Dr. Lamy acknowledged that he signed the Coronary Agreement and the Compass Letter of Understanding as Andre Lamy. He noted that this is how he signs all documents.

However, he stated that he signed the documents in his capacity as an employee of the Appellant, since he provided the services as an employee of the Appellant.

[53] Dr. Lamy's testimony is supported by the billings made for his medical services.

He bills the Government of Ontario for such services in his own name.

The Respondent does not challenge the Appellant's position that any monies received in respect of such services are received by Dr. Lamy for and on behalf of the person providing the service, i.e., his employer, the Appellant.

The result is the same with respect to the research activities: Dr. Lamy signed his own name on the contracts, but he provided the services as an employee of the Appellant. [CONSISTENCY]

Results:

[39] As I noted previously, Dr. Lamy testified that he performed all of his research activities as an employee of the Appellant. His testimony is consistent with the admissions made by the Respondent and the subjective evidence before me.

[43] Since Dr. Lamy is the only employee of the Appellant, clearly he is the only one conducting the business of the Appellant, namely performing surgery, providing care to patients and conducting medical research. In other words, if the Appellant carried out the research in question in these appeals, then Dr. Lamy had to perform the research work.

[54] The evidence before me is that from 2008 until the present time any activities of Dr. Lamy relating to the business of the Appellant, including researching improvements in cardiac surgery, were activities of his employer, the Appellant.

[44] The Employment Agreement specifically provides that Dr. Lamy shall not devote any of his time to any business other than the business of the Appellant. He testified that he complied with this provision and I received no evidence to contradict his testimony.

Conclusion:

[46] On the basis of these facts and the other evidence before me, I conclude that the Appellant performed the SR&ED.

Dr. Lamy physically performed his research as an employee of the Appellant.

[AUTHOR'S NOTE: THIS PROVIDES A DEGREE OF CLARITY TO ALL CLAIMS BY MEDICAL PROFESSIONAL CORPORATIONS. SPECIFICALLY IT RECOGNIZES THAT THE DOCTOR HIM OR HERSELF CAN REPRESENT THE CORPORATION WHEN SIGNING DOCUMENTS.]

Significant variables addressed: Yes

FEATURED PUBLICATIONS

Let's review Excerpts from published protocols

- Lamy A, Devereaux PJ, Prabhakaran D, Taggart DP, Hu S, Straka Z, Piegas LS, Avezum A, Akar AR, Lanas Zanetti F, Jain AR, Noiseux N, Padmanabhan C, Bahamondes JC, Novick RJ, Tao L, Olavegogeascoechea PA, Airan B, Sulling TA, Whitlock RP, Ou Y, Gao P, Pettit S, Yusuf S, CORONARY Investigators. Five-Year Outcomes after Off-Pump or On-Pump Coronary Artery Bypass Grafting. N Engl J Med. 2016 Oct 23 doi:10.1056/nejmOA1601564.

- Lamy A, Tong W, Devereaux PJ, Gao P, Gafni A, Singh K, Taggart D, Straka Z, Akar AR, Piegas L, Ou Y, Yusuf S. The Cost Implications of Off-Pump Versus On-Pump Coronary Artery Bypass Graft Surgery at One Year. Ann Thorac Surg:2014 Nov;98(5):1620- 5 PMID:25261272.

- Lamy A, Devereaux PJ, Prabhakaran D, Taggart D, Hu S, Paolasso E, Straka Z, Piegas L, Akar A, Jain A, Noiseux N, Padmanabhan C, Bahamondes J, Novick R, Vaijyanath P, Reddy S, Tao L, Olavegogeascoechea P, Airan B, Sulling TA, Whitlock R, Ou Y, Ng J, Chrolavicius S, Yusuf S, The CORONARY Investigators Off-Pump or On-Pump Coronary-Artery Bypass Grafting at 30 Days. N. Eng Med. 2012 Apr 19;366(16):1489-97.

- Lamy A, Devereaux PJ, Prabhakaran D, Hu S, Piegas LS, Straka Z, Paolasso E, Taggart D, Lanas F, Akar AR, Jain A, Noiseux N, Ou Y, Chrolavicius S, Ng J, Yusuf S. Rationale and design of the Coronary Artery Bypass Grafting Surgery Off or On Pump Revascularization Study: A large international randomized controlled trial in cardiac surgery. Am Heart J. 2012 Jan; 163 (1) 1-6.

Coronary Protocols developed by Dr. Lamy

Table of Contents

1 Introduction and Rationale 9
2 Study Objectives 9
3 Study Design 14
3.1 Type of study 14
3.2 Expected number of subjects 14
3.3 Method of treatment allocation 14
3.4 Duration of the study period for each subject 15
4 Study Population 16
4.1 Inclusion Criteria 16
4.2 Exclusion Criteria 16
5 Study Procedures 17
5.1 Interventions 16
5.2 Schedule of visits and observations 17
5.3 Visit Schedule 19
5.4 Selection procedures (entry procedures) 19
5.5 Encouraging subject compliance 19
5.6 Study measurements 20
5.6.1 Study Outcomes 20
5.6.2 Definitions of Study Outcomes 20

Project started by citing other studies

LAMY, Andre
Project Title: CABG Off or On Pump Revascularization Study (CORONARY)

Table 1 Meta-analysis of RCTs (graft patency)

Review: Off-pump Patency_4 studies
Comparison: 01 Off-pump CABG versus On-pump CABG
Outcome: 01 Patency (inverse)

Study or sub-category	On-pump n/N	Off-pump n/N	RR (fixed) 95% CI	RR (fixed) 95% CI	Order
Khan	127/130	114/130		1.11 [1.04, 1.19]	1
Lingaas	153/163	124/140		1.06 [0.99, 1.14]	2
Puskas	249/260	235/251		1.02 [0.98, 1.07]	3
Nathoe	83/89	63/69		1.02 [0.93, 1.12]	4
Total (95% CI)	642	590		1.05 [1.02, 1.08]	

Total events: 612 (On-pump), 536 (Off-pump)
Test for heterogeneity: Chi² = 4.75, df = 3 (P = 0.19), I² = 36.8%
Test for overall effect: Z = 3.12 (P = 0.002)

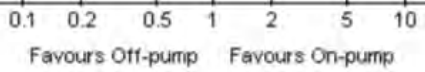

Results correlated to causes

Table 2. Results of the Canadian off-pump CABG Registry (modified from Lamy et al [25])

Propensity score-matched in-hospital and one-year outcomes

	Off-pump (n=1,233)	On-pump (n=1,233)	Odds ratios (95% CI)	P value
In-hospital				
Mortality (%)	1.5	1.7	0.90 (0.48, 1.69)	0.750
Stroke (%)	0.8	1.6	0.49 (0.23, 1.06)	0.072
Myocardial infarction (%)	3.0	1.5	2.09 (1.18, 3.69)	0.011
Acute renal disease*	0.4	1.4	0.23 (0.08, 0.69)	0.009
Graft completed (mean +/- SD)	2.62 +/- 1.0	3.36 +/- 0.9		p<0.01
One-year†				
Mortality (%)	3.5	3.9	0.90 (0.59, 1.38)	0.643
Stroke (%)	1.4	2.7	0.49 (0.27, 0.90)	0.021
Myocardial infarction (%)	3.9	3.0	1.32 (0.85, 2.06)	0.215
Renal dialysis* (%)	1.1	2.1	0.51 (0.25, 1.02)	0.058
Coronary angiogram (%)	3.3	3.8	0.86 (0.55, 1.33)	0.502
Coronary revascularization (%)	1.9	1.9	1.02 (0.56, 1.86)	0.936

*Patients on renal dialysis at baseline were excluded from analysis

Analysis 30 days post operation New Variables

LAMY, Andre
Project Title: CABG Off or On Pump Revascularization Study (CORONARY)

Table 3. Results of a meta-analysis (modified from Cheng et al [27])

In-hospital or 30 days outcomes [number of patients at risk]	Off-pump	On-pump	Odds ratios (95% CI)	P value
Mortality (%) [3082 patients]	1.2	1.0	1.02 (0.58, 1.80)	0.9
Stroke (%) [2859]	0.4	1.0	0.68 (0.33, 1.40)	0.3
Myocardial infarction (%) [2721]	2.0	2.8	0.77 (0.48, 1.26)	0.2
Acute renal failure [1467]	0.9	2.1	0.58 (0.25, 1.33)	0.2
Neurocognitive dysfunction [335]	40.0	50.6	0.57 (0.21-1.54)	0.5
Atrial fibrillation [2425]	17.6	26.8	0.58 (0.44-0.77)	<0.001
Transfusions [2412]	28.4	42.5	0.43 (0.29-0.65)	<0.001
Re-exploration for bleeding [2307]	1.7	2.2	0.81 (0.44-1.49)	0.5
Inotropes use [1655]	15.1	23.6	0.48 (0.32-0.73)	<0.001
Intra aortic balloon pump [1262]	1.1	1.0	1.07 (0.39-2.89)	0.9
Mediastinitis/wound infection [2076]	3.0	4.8	0.65 (0.41-1.04)	0.07
Respiratory infection [896]	4.6	9.9	0.41 (0.23-0.74)	<0.001
Number of grafts	2.6	2.8		<0.001

5.3 Visit Schedule

Table 4: Schedule of follow-up.

VISIT SCHEDULE	Pre-op	OR Day	Day 1	Day 2	Discharge	30 Day	6 Mth*	Yr 1	Yrs 2-4*	Final Visit
Inclusion/Exclusion Criteria	✓									
Informed Consent	✓									
Patient Demography	✓									
Baseline Blood & ECG	✓									
Medical History	✓				✓					
Details of Surgical Procedure		✓								
Patient Evaluation	✓									
Outcomes Events					✓	✓	✓	✓	✓	✓
CKMB	✓		✓	✓						
Creatinine	✓				✓			✓		✓
ECG	✓					✓				✓
MoCA, Trail Making Test, DSST and EuroQoL	✓				✓	✓		✓		✓

Sample size and scope of work

Table 5a: Sample size to detect RRR in the ranges of 25 to 35% at various event rates for first co-primary outcome at 30 days (no loss to follow-up, conversion rate from on-pump to off-pump is assumed at 1% and from off-pump to on-pump is at 2.7%). We are proposing a sample size of 4,700 patients.

On-Pump Event Rate	Hazard Ratio	Power		
		80%	85%	90%
0.08	0.65	2861	3271	3825
	0.70	4016	**4591**	5368
	0.75	5958	6810	7964
0.09	0.65	2541	2904	3396
	0.70	3566	4077	**4767**
	0.75	5292	6049	7074
0.10	0.65	2284	2611	3053
	0.70	3207	3665	4286

Mortality Shift vs. Tables 2 & 3
Higher Earlier but Lower > 1 year

Table 5b: Expected results of the CORONARY study

	Off-pump	On-pump	Relative risk
30 days			
Mortality (%)	2.1	2.1	1.0
Stroke (%)	0.97	1.9	0.51
Myocardial infarction (%)	3.95	5.0	0.79
Acute renal failure	0.75	1.8	0.42
Composite Outcome (all events)	7.77	10.8	0.72
Composite Outcome (first event)	6.37	8.86	0.72
One-year			
Mortality (%)	2.8	3.0	0.93
Stroke (%)	1.6	3.3	0.48
Myocardial infarction (%)	5.4	6.4	0.84
Acute renal failure (%)	1.3	2.5	0.52
Coronary revascularization (%)	2.5	1.9	1.3
Composite Outcome (all events)	13.6	17.1	0.80
Composite Outcome (first event)	10.2	12.8	0.80
Composite Outcome (first event) 5 years	17.6	22.0	0.80

Table 7: Direct costs (adapted from Cheng et al [27])

Study	Difference during the Initial Hospitalization*	Difference at 1 year *	P value
Ascione[55]	USD $1,117	N/A	p<0.001
Lee[56]	USD $5,273	N/A	p<0.0001
Nathoe [14]	USD $1,375	USD $1,839	p<0.001
Straka[26]	Euro € 936	N/A	p<0.001
Puskas [13]	USD $2,272	USD $1,955	p<0.0001
Lamy [25]**	CAN $2,020	CAN $2,112	p<0.001

* All studies demonstrate lower costs in off-pump CABG compared to on-pump CABG
** Non-randomized study
N/A Not Available

Table 2: Propensity Score Pair-Matched Costs Comparisons from the Canadian Off-pump CABG Registry[10]

	Off-pump N=1,233	On-pump N=1,233	P value
Initial Hospitalization Costs	$11,744 ± $237	$13,720 ± $301	0.001
CABG Procedure	$5,013	$5,147	n.s.
Surgical Device	$264 ± $8.8	$790	0.001
Post-op ICU	$3,422 ± $187	$4,106 ± $244	0.026
Post-op Ward	$3,045 ± $98	$3,676 ± $150	0.001
Total Blood Products	$28 ± $3.9	$79 ± $3.9	< 0.001
Follow-Up Costs	$319 ± $54	$421 ± $65	0.016
One-Year Accumulative Costs	$12,063 ± $243	$14,141 ± $307	0.001

* All costs expressed in mean ± sem based on non-transformed dataset.

Description and Rationale of Protocol Modifications

Original	Not applicable
Revision	Section 8 Substudies and Ancillary Studies **Renal Substudy** **Acute kidney injury (AKI) is an abrupt loss of kidney function and occurs frequently in people who are ill (~ 15% of cardiac surgeries, 5% of hospital admissions, and up to 50% of patients in the intensive care unit). AKI is recognized by observing a sudden rise in serum creatinine. This rise in serum creatinine is invariably modest and transient, with the value returning back to a level which predated the AKI. Historically AKI by this definition was believed to have no lasting impact. More recently a growing number of clinical studies highlight the association between AKI and the subsequent development of a permanent reduction in kidney function termed chronic kidney disease (CKD, includes the need for permanent long-term dialysis). This association is also supported by animal studies where the AKI event altered the renal microvasculature with subsequent upregulation of inflammatory and fibrotic signaling pathways. However, it remains unknown whether avoiding AKI prevents CKD.** **Compared to on-pump CABG, it is strongly expected that off-pump CABG will prevent AKI (73% relative risk reduction was observed in meta-analysis). The data currently collected in CORONARY will be augmented to include serum creatinine measurements in the perioperative period, one year and five year/final follow-up period for study patients. By doing so, it will determined if performing CABG surgery without bypass results in less CKD, and whether this association is mediated by the avoidance of transient elevations in serum creatinine (AKI).**

SR&ED Medical Issues – in contention with CRA 2016 – 2021

		2021	2020	2019	2017	2016
1	AFP / APP funding as assistance Portion related to SR&ED?	?	PDF Video	PDF Video	PDF Video	PDF Video
2	Directly engaged / entitlement to exploit Doctor vs. MPC?	Dr. Lamy case	PDF Video	PDF Video	PDF Video	PDF Video
3	Contract eligibility tips	CRA 2019 guidance	PDF	PDF Video		
4	Proving input on protocols	Dr. Lamy case	PDF	PDF Video		
5	Speed of appeals (Objections > 4 years +)	Resolved?	PDF	PDF Video		

Issue 1 -"All AFP or surgical funding SR&ED assistance"

CRA stated,

- "The doctor being a member of the Department of the hospital AFP Practice Plan is receiving **$X of AFP academic funding** from the Government of Ontario, as well as receiving **$Y of surgical repair funding**.
- These amounts … considered Government Assistance … per subsection 127(18) of the ITA."

SREDStakeholder.CA

Update to position 2020

AFP agreement defined

- "Academic funds" as "monies to support teaching and research activities by Participating Physicians" and
- "Clinical Repair Funds" as "monies to support clinical activities by Participating Physicians".
- Therefore, we conclude that part of the academic funding was in respect of the SR&ED. Since **Y% of Dr. X's' time is dedicated to research per the "Letter of Offer"** provided, we are reducing the qualified expenditures by Y% of the academic funding received.

SREDStakeholder.CA

Our comment on 2020/21 position

- New CRA allocations either $0 or attempting a reasonable basis vs. 100% prior
- CRA did not appear to propose any AFP payments to Dr. Lamy SR&ED related
- All positive steps by CRA

SREDStakeholder.CA

Guidelines from SR&ED Director General – May 2, 2019

- Government assistance – whether AFP or any other funding included?

This item is still under review by Rulings/Legal Services. For now, we must continue to apply the contract payment policy.

SREDStakeholder.CA

Legislation

- Income tax act “Reduction of qualified expenditures” (127(18))
  - “Where …taxpayer has received, is entitled to receive or can reasonably be expected to receive a particular amount that is government assistance, non-government assistance or a contract payment that can **reasonably be considered to be in respect of** scientific research and experimental development, …

SREDStakeholder.CA

AFP Practice Models – purpose & variations

Ontario

HealthForceOntario

Specialist Practice Models

Compensation Options

Specialists in Ontario may be compensated through a fee for service system or through an Alternative Funding Plan (AFP) or Alternative Payment Plan (APP). AFPs/APPs are contractual arrangements between the Ministry of Health and Long-Term Care and a group of physicians, and may include other organizations such as hospitals and universities. Some AFPs/APPs also include funding for teaching and research.

These agreements provide flexibility in practice, encourage coordination and integration of medical services, and stabilize compensation for highly specialized groups, specialists and sub-specialists. AFPs/APPs have become more attractive and desirable to many physicians seeking a more balanced working life, regular hours, and acknowledgement of patient acuity, geographical challenges and financial security.

Over the years, a variety of compensation models have been developed and used by AFPs/APPs. Presently, most agreements are blended models that combine a base rate, incentive/premium payments and possibly a fee-for-service component payment. There are several remuneration methods:

- Global/block funding based on specific services or locations
- Blended funding models that include a base payment for clinical services, teaching, research, administration or indirect services plus a premium payments, which could be based on a percentage of the value of Fee-for-Service billings
- Bed utilization rate
- Sessional payment plus fee-for-service billings

AFP/APP Models

There are a variety of models used to cover:

- Specific communities and under-serviced specialties
- Individual departments in a single hospital
- Entire services of all physicians at a single hospital
- Services of all full-time specialists at an academic health science centre
- Province-wide gynaecology oncology, radiation oncology and medical oncology services
- Emergency services in hospitals, specialist services in the north and agreements with specialists and subspecialists associated with academic health science centres
- Regional trauma hospitals to ensure the 24-hour availability of high-level care for patients with serious trauma (Trauma Team Leader global funding agreements)
- Academic Health Science Centres, for clinical services, education and research
- Services such as psychiatry, the Regional Surgical Network, neurosurgery/neurology and anaesthesia in northern regions

For more information, read the Ministry's Resource Manual for Physicians.

Author's summary / opinions

1) Need for disclosure of SR&ED portion

- Many uses of funds,
  - Many require breakdown of research / AFP approved by every member however,
  - procedure seldom followed.
- Nature of AFP model
  - strong argument that none, or perhaps only a minimal amount AFP funding
  - directly related to SR&ED
  - More REGULATION than ASSISTANCE
  - **Recent CRA approaches "reasonable" allocation**

SREDStakeholder.CA

Author's summary / opinions

2) Status of current CRA position unclear

Currently not being reduced?

- Since early 2020 CRA seems to have stopped treating full AFP payments as "assistance"

Still need for national direction

- Additional direction& examples would be welcome on issues including
  - Typical ranges or % by specialty if not specified
  - Perhaps supported by discussions with industry

SREDStakeholder.CA

Recommendations

1) Improve reporting by hospitals

- If hospitals / universities begin to
  - report the “research” component
  - of any AFP funding
  - should resolve “assistance” issue

SREDStakeholder.CA

Issue 2 -
CRA Statement :“directly undertaken”

In assessing the claim for wages paid to Dr. X in his MPC the CRA stated,

- “We have determined that the specified wages claimed were not incurred for scientific research and experimental development **"directly undertaken by the taxpayer" nor** was it for work "directly undertaken **on behalf** of the taxpayer" as required under Paragraph 37(1) (a) and Subparagraph 37(1) (a) (i) of the Income Tax Act (ITA).

SREDStakeholder.CA

Issue 2 - “Directly Undertaken”

Dr. Lamy judgement clarifies that

- The individual doctor should be able to act on behalf of the MPC
- Note that Dr. Lamy was only employee of MPC and contract specified no other work allowed

- ISSUE APPEARS TO BE RESOLVED IN CLAIMANTS FAVOUR

SREDStakeholder.CA

3) Objection delays Guidelines from SR&ED Director General – May 2, 2019

- the length of time that objections & appeals are taking to be addressed.

As Appeals is independent of SR&ED, we don't have this information at hand. We are however in discussion with Appeals and they are aware of the direction we are taking.

SREDStakeholder.CA

Status March 2021

Based on discussions with SR&ED practitioners the backlog on these objections appears to have been remove.

As a result we consider this issue RESOLVED.

4) Consistency of Assessments Guidelines from SR&ED Director General – May 2, 2019

- Consistency of the application of these policies across Canada & within regions &/or

The guidance will be shared Nationally and the HQ plans to continue monitoring these claims to help ensure consistency and identify any further guidance or training requirements that may arise. We are also briefing the A/Ds in person shortly on the file.

SREDStakeholder.CA

5) Evidence of protocol design Guidelines from SR&ED Director General – May 2, 2019

- Challenging if the Dr. was involved on protocol designs (e.g. What evidence is relevant)?

Medical guidance document does not specifically address this. It does speak generally to documentation for the work performed and the importance of agreements demonstrating the research relationships and responsibilities.

SREDStakeholder.CA

What if example, claimant provides

- list recommended changes to protocols &
- Supporting emails, transcripts & sponsor support letters confirming inputs & significant resultant protocol changes.

What if CRA responds,
"No documents available to substantiate claimant contribution toward scientific input to hypothesis formulation, study design, and protocol." - **How to prove?**

Implications of Dr. Lamy MPC case

- CRA challenged work on 2 sponsored projects
- Ruling - Dr. Lamy eligible on ALL projects
- Case provides excellent examples of
  - Strong evidence of input on protocols (Coronary Project) government sponsored & open source
  - Less evidence of involvement (Compass project) for Bayer & private
  - **Risk the CRA may challenge input despite strong evidence – e.g. Coronary project challenged**

SREDStakeholder.CA

Documents typically requested

- Evidence of scientific uncertainties
- Departures from routine practice
- Study protocols & amendments
- Research Ethics Board documentation
- Clinical Study agreements
- Consent Form(s)
- Other docs; laboratory notebook entries, data analyses, meeting minutes, emails, etc.

SREDStakeholder.CA

Recommendations

- Document all input on protocol design
- Document R&D time clearly vs. other professional obligations, clinic time, patient time, academics, …
- Include evenings & weekends if appropriate
  - legitimately, many doctors use for private research
- Ask for a PCPR (Pre Claim Project Review)?

SREDStakeholder.CA

FTCAS – don't quit > strike 1

- First Time Claimant Advisory Service
- First time MPC claims often receive a presentation which clearly dissuades against further claims
- The next claim may be approved even after an intimidating FTCAS (first) meeting
- Less of problem >2018 but many may have dissuaded

SREDStakeholder.CA

Using Patents as examples of Technological Advancement

SREDStakeholder.CA

Bell vs. Eurocopter

Presented by Ben Mak, BASc., LLB

International Definition of an R&D project

- "For a … project to be classified as R&D, its completion must be dependent on a scientific &/or **technological advance**, the aim of the project must be the **systematic resolution** of a scientific and/or **technological uncertainty**."

- Source: Frascati Manual 2002, paragraph 135

SRED Stakeholder CA

The Realm of Experimental Development

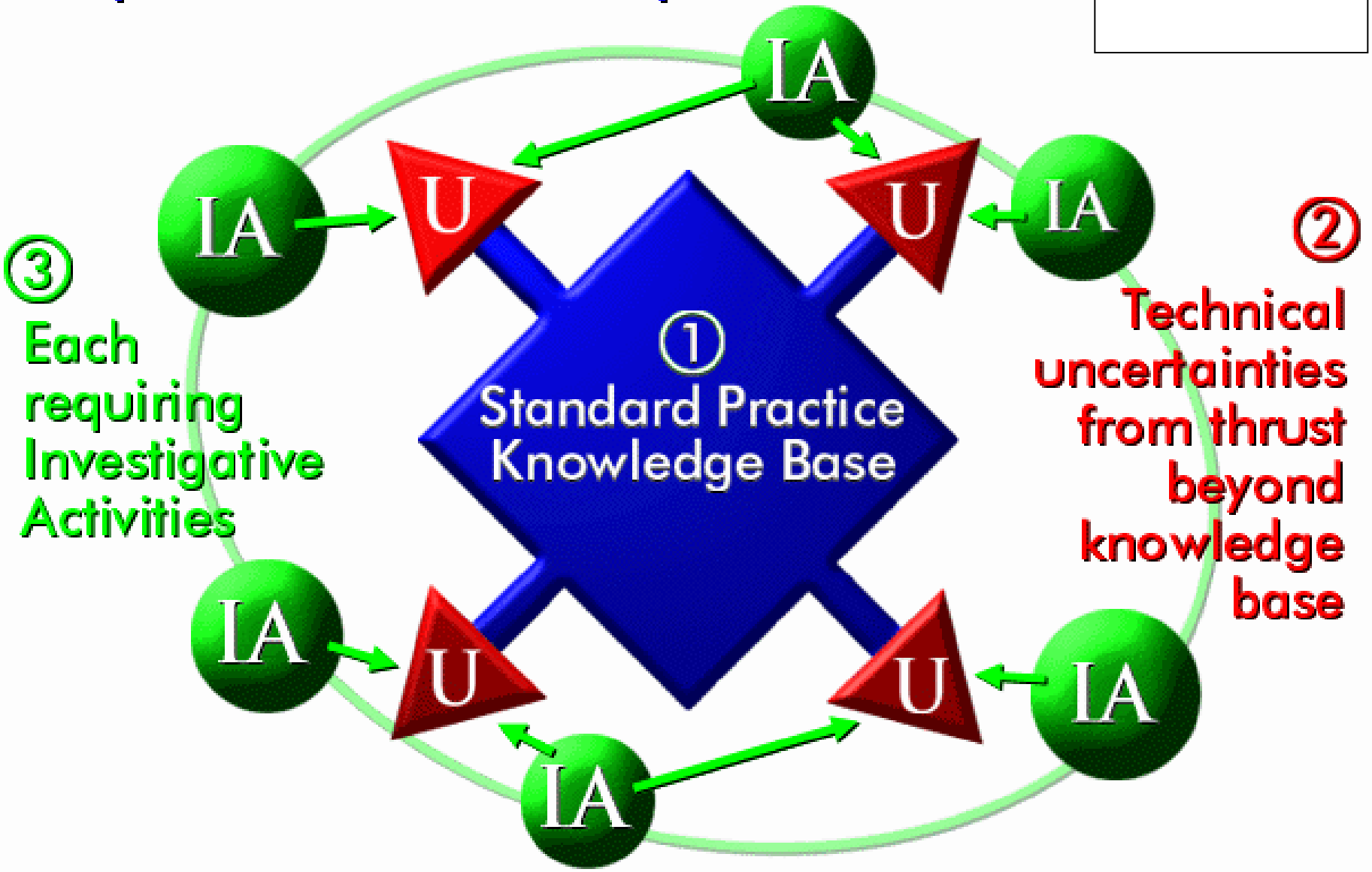

SR&ED - ITA 248(1) Definition

"**Scientific research and experimental development** means **systematic investigation … in a field of science or technology by experiment or analysis** that is:

- (a) **basic research**, for **advancement of scientific knowledge** without specific practical application in view,
- (b) **applied research**, for **advancement of scientific knowledge** with specific practical application in view, **or**
- (c) **experimental development**, for the purpose of achieving **technological advancement** for the purpose of **creating new, or improving existing**, **materials, devices, products or processes, including incremental improvements thereto**

SREDStakeholder.CA

CRA guidelines – Defining "Technology Base"

Technology base or level … includes:

- technical knowledge ...of its personnel;
- current products, techniques, methodologies (trade secrets & intellectual property).
- **publicly available sources** … publications, journals, textbooks, internet-based information & expertise ... through employees or contractors.

The technology base will vary from company to company even though the **knowledge available publicly remains the same**.

Source: CRA SR&ED Glossary Dec. 19, 2012 SR&ED policy papers

SREDStakeholderCA

Using patent cases to illustrate TA

Benefits

- Similar focus on Technological Advancement
- Rules similar internationally
- Often deeper analysis vs. tax court judgments
- Examples for SR&ED claimants self assess
- Encourage integration with SR&ED process

SREDStakeholder.CA

Landmark decision defining Technological Advancement

- ***2012 FC 113* - *Eurocopter v. Bell Helicopter***
  - *Patents: Sound Prediction*
  - *Patents: Punitive damages*

Key Criteria Summary

2101 - Bell vs. Eurocopter - Patent Defense analysis					
BENCHMARKS	**ACTIVITIES BY YEAR**				
Internet searches: 1 Articles	2021				
Competitive products or processes: 4 products	'1-1	'1-2	'1-3	1-4	'2-1
Similar prior in-house technologies: 1 products / processes	Legacy Landing gear - infringes patent	Experimental exception defence	Prior art defence	Determining $ damages	Production landing gear does NOT infringe patent
OBJECTIVES	**RESULTS**				
Eliminate ground resonance instability: 1 1=yes / 0= no	1				1
load distribution: %					
UNCERTAINTIES & KEY VARIABLES	**CONCLUSIONS**				
1 - Defining prior art vs. Eurocopter patent					
define transition zones	Y				
double curvature of transition zones	Y				
integrated front cross piece	Y				
moustache or sleigh shape	Y				
2 - Advancements in Bell vs. Eurocopter patent?					
attach cross piece with saddle joint - stiffness?					Y
eliminate double curvature					Y
resulting pitch & roll frequencies					Y
	METHODS				
Analysis					
Trials					
Prototypes	21				30
	COSTS				
Hours	3776				4500
Materials $	100000				150000
Subcontractor $					

Eurocopter v. Bell Helicopter

2012 FC 113, Martineau J.

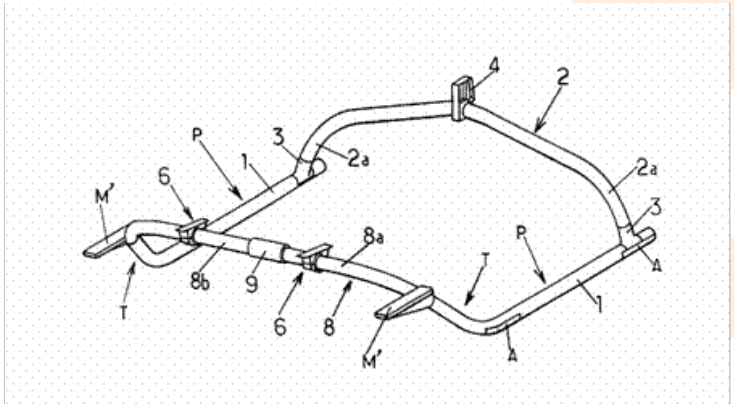

v.



Eurocopter v. Bell Helicopter

2012 FC 113, Martineau J.

- **Overview**
  - "Classic patent infringement/invalidity scenario"
  - Eurocopter claims infringement of Canadian Patent No. 2,207,787 (the '787 patent), directed to skid-type "moustache" landing gear
  - (Patent written in French – English translation used by Court)

Eurocopter v. Bell Helicopter

2012 FC 113, Martineau J.

- **Overview**
  - Bell sued over two landing gear designs: "Legacy" and "Production" gear



"Production" landing gear "Legacy" landing gear

  - Claims 1, 2, 3, 4, 5, 7, 9, 10 and 15 asserted for infringement
  - All 16 claims challenged on validity
  - All 16 claims are ***device*** claims

Eurocopter v. Bell Helicopter

2012 FC 113, Martineau J.

- **Basic Facts**
  - The patent sets out a number of advantages of the "moustache" design over a conventional skid-style gear having two skid ends protruding in front:

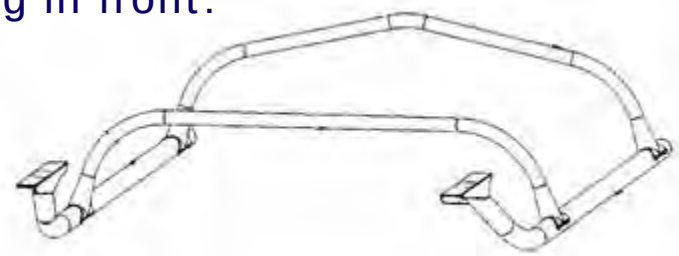

(a) Elevated acceleration factors upon landing (load factors);

(b) Difficult frequency adaptation with respect to ground resonance; and

(c) High landing gear weight.

Eurocopter v. Bell Helicopter

2012 FC 113, Martineau J.

- **Basic Facts**
  - Claim 15 covers an embodiment wherein the front "moustache" cross-piece is inclined forward from where the skids touch the ground
  - Claim 16 covers an embodiment wherein it is inclined backward
  - Claims 1-14 do not specify direction of inclination
  - Eurocopter had only tested and demonstrated the stated advantages for a version of the moustache landing gear corresponding to Claim 15
  - Patent had figures showing both variants (e.g. Fig. 1 & 11e)

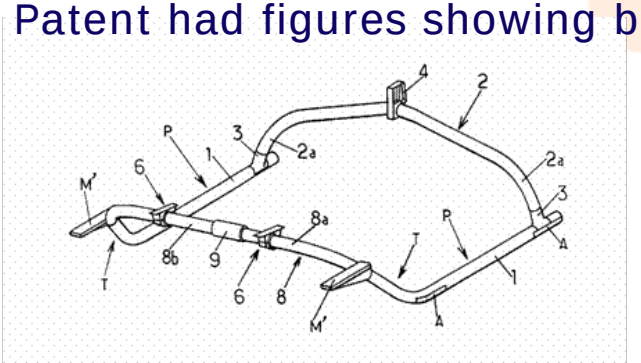

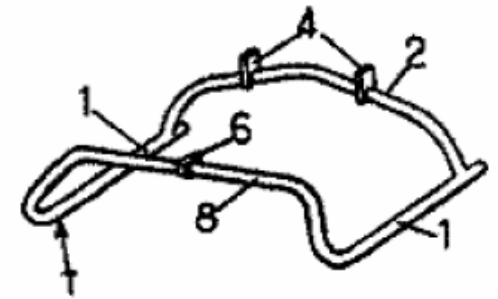

Eurocopter v. Bell Helicopter

2012 FC 113, Martineau J.

- **Issue #1: Sound Prediction**
  - Court holds that these three stated advantages constitute a "promise" of specific utility (following Hughes J. in *Mylan Pharmaceuticals* (2011))
  - Court then proceeds to ask whether, at the filing date, the patentee had sufficient information upon which to base the promise
  - Expert evidence suggests that the backwards inclination might have disadvantages (e.g. it might be more susceptible to buckling)
  - In the absence of evidence to support the backward-inclined embodiment meeting the promise, the Court finds a lack of ***demonstrated*** utility in Claim 16 as of the filing date

Eurocopter v. Bell Helicopter

2012 FC 113, Martineau J.

- **Issue #1: Sound Prediction**
  - Court goes on to invalidate Claims 1-14 on the same grounds because they encompass the backward-inclined embodiment shown in Fig. 11e of the patent

- **The test for sound prediction / overbreadth**
  - A claim may be invalidated for lack of demonstrated utility or overbreadth if:
    - the patentee cannot ***soundly predict*** as of the ***filing date*** that
    - ***all*** embodiments (or maybe just all ***described*** embodiments?) encompassed by the claim
    - demonstrate ***all*** of the stated advantages (or maybe just some?)
    - this is true even for patents having ***only device claims***

Eurocopter v. Bell Helicopter

2012 FC 113, Martineau J.

- **Issue #2: Punitive Damages**
  - Bell held to infringe claim 15 with both designs
  - Court doesn't believe Bell's evidence that they had no knowledge of the patent
    - Bell trained its employees on a leased Eurocopter EC120 vehicle having the new landing gear design
    - These employees proposed the Bell "Legacy" design shortly thereafter: it's a "slavish copy" of the Eurocopter design
    - Court finds that Bell knew the new design would infringe the patent but ignored these concerns when raised
  - Bell's sophistication and bad faith justify punitive damages
  - Quantum of punitive damages to be determined later (bifurcated proceedings)

Bell vs. Eurocopter
Landing gear layouts

SREDStakeholder.CA

Eurocopter “Moustache” landing gear

[9] Figure 1 of the ‘787 Patent is an isometric view of the Moustache type landing gear:

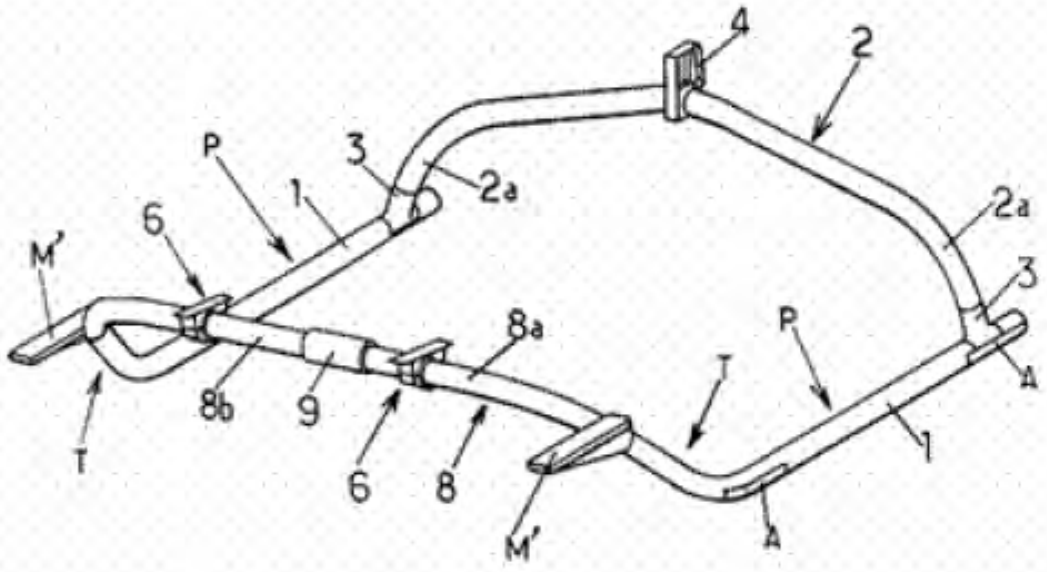

Eurocopter “Moustache” landing gear

Claim 1 (translated)

1. Helicopter landing gear, comprising two skids each having a longitudinal ground support surface and connected to a front cross piece and a rear cross piece which are themselves attached to the structure of the helicopter by connecting devices, the rear cross piece being attached by the ends of its descending branches to the rear part of said longitudinal support surfaces,

characterized in that each of said skids has at the front an inclined transition zone with double curvature orienting itself transversely in relation to said longitudinal ground support surfaces, above the plane of the latter,

the two transition zones together constituting, in this way, an integrated front cross piece, offset in relation to the front delimitation of the plane of contact of the longitudinal support surfaces of the skids on the ground.

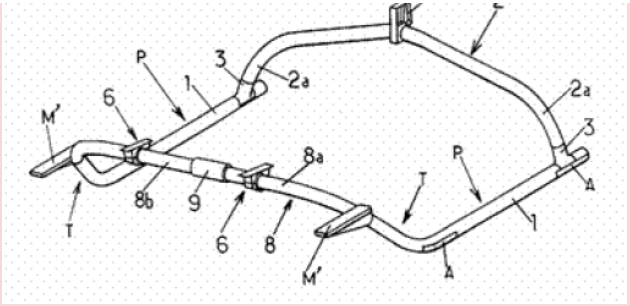

Conventional design

skid-type helicopter landing gears. The common general knowledge in the field of conventional skid-type landing gears was thus defined under prior art by an orthogonal design having long, straight and usually circular tubes oriented longitudinally, ending with a short ski type protrusion at the front end, similar to the general design shown on the isometric view set out at para. 209 of the Reasons, and here reproduced:

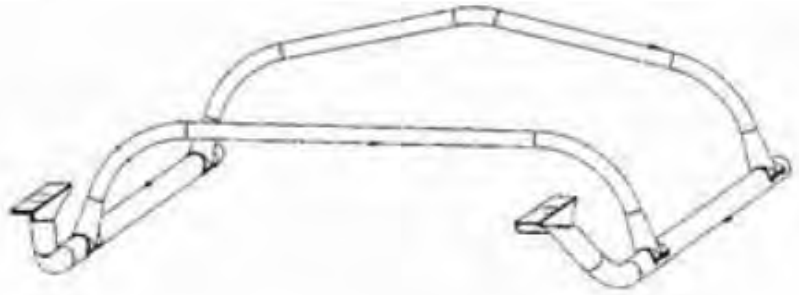

In this conventional design, the front and rear cross pieces are parallel with respect to each other and they are perpendicular or substantially perpendicular to the ground skids. Both cross pieces are attached to the ground skids by way of a saddle or "tee" attachment.

Moustache design specifics

[27] The Judge also concluded the “double curvature” of transition zone is obtained first by

- a “fairly large” bend when the skid’s cross piece bends upwards (C1 figure), then a

- second bend where the cross piece extends horizontally to meet the fuselage (C2 of figures)

- as in figures 4a, 4b and 10 of the ‘787 Patent

SREDStakeholder.CA

Moustache design specifics

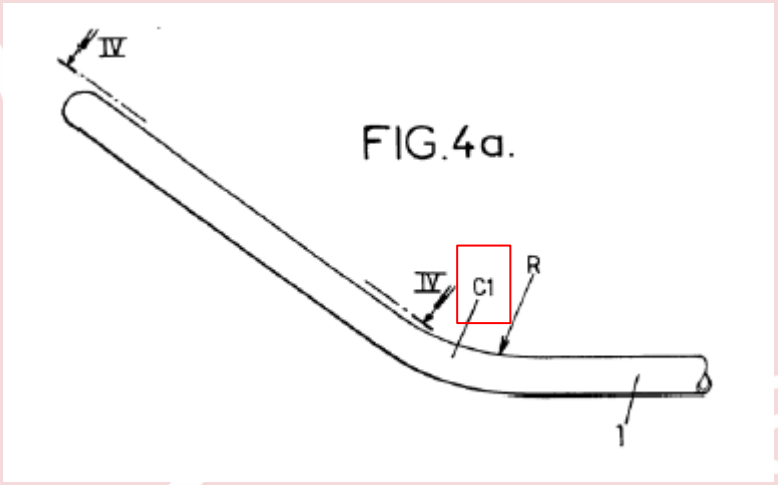

FIG.4a.

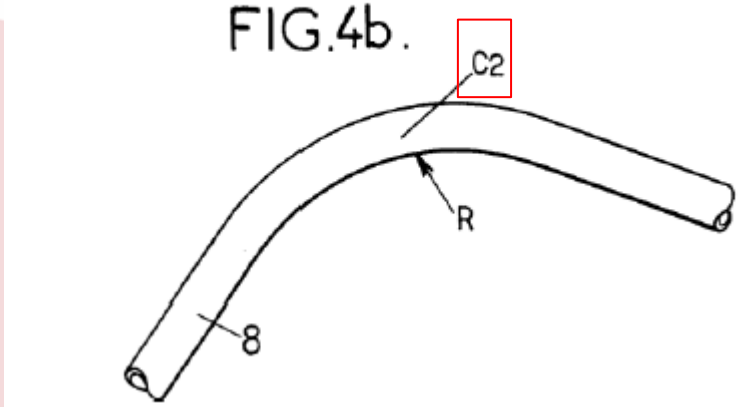

FIG.4b.

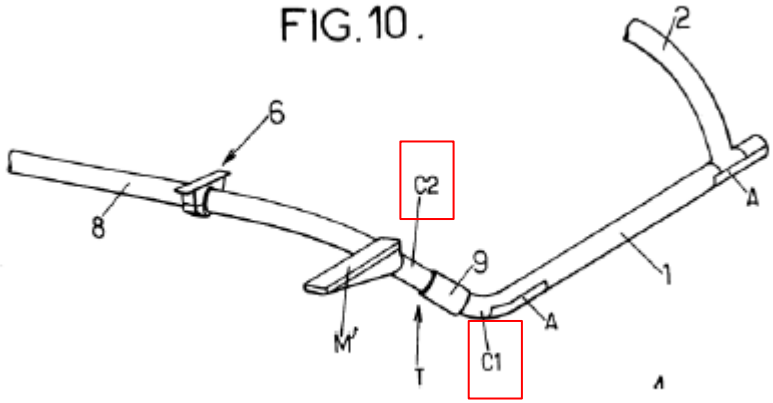

FIG.10.

Moustache vs. Conventional

[47] The Judge also found (at paras. 322 and 329) that the '787 Patent disclosed the best mode of the invention and was clear enough to allow a skilled person "to understand the general functioning of the claimed invention and its main features." He found that Figures 12 and 13 set out in the patent were particularly enlightening to show how the Moustache landing gear's integrated front cross piece will contribute to the overall energy balance and will play, thanks to the bending of the transition zones, a leading role for the absorption of those forces generated during rough and running landings. These figures are reproduced below and show perspective views of the deformations of a conventional landing gear (left) as compared to the Moustache landing gear (right):

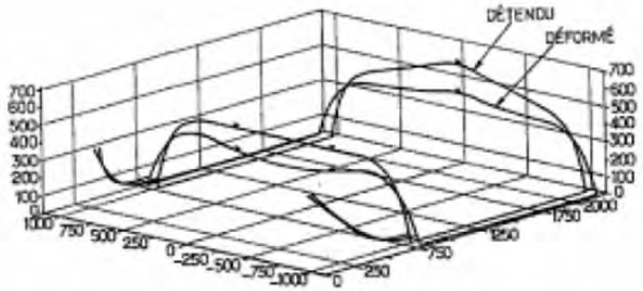

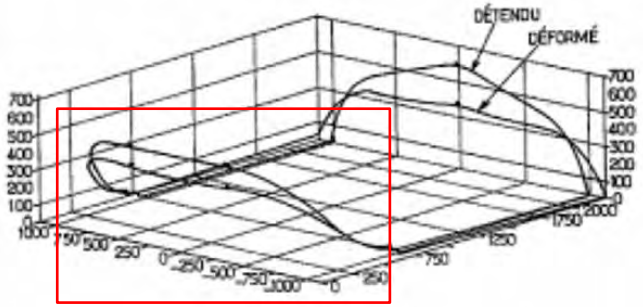

Moustache vs. Conventional

- [48] Judge .. particularly satisfied
- in light of the actual testing carried out,
- inventors had demonstrated .. claim 15 in which
  - integrated front cross piece
  - is offset forwards in relation to the front delimitation of the plane of contact
  - of the longitudinal support surfaces of the skids on the ground.

SREDStakeholder.CA

Bell Legacy landing gear

[13] The sleigh type Legacy landing gear was made or assembled by Bell Helicopter in March of 2003: Reasons at para. 171. The Judge reproduced the following isometric views of the Legacy landing gear at paras. 23 and 394 of the Reasons:

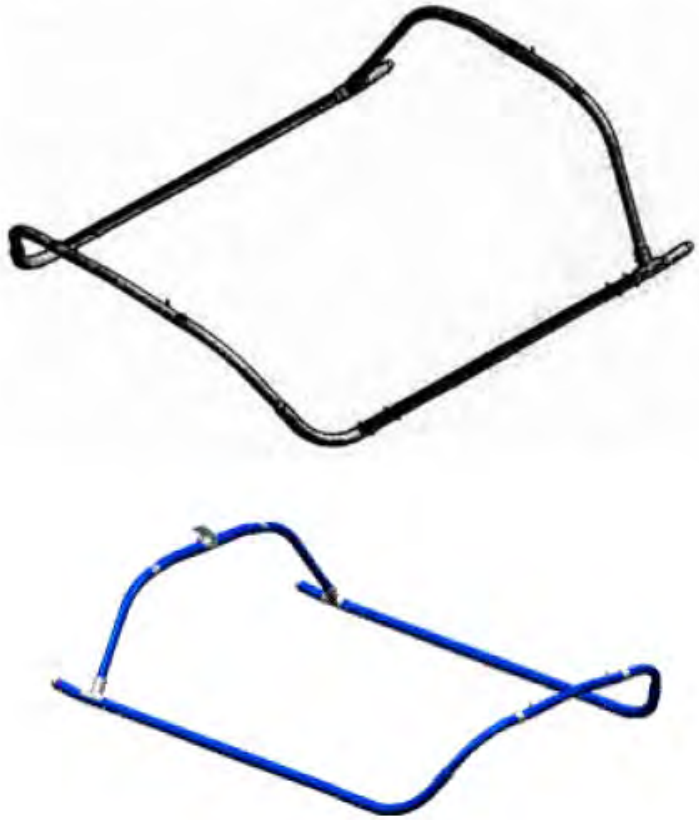

Bell Production landing gear

[16] The Judge reproduced the following isometric views of the Production landing gear at paras. 25 and 395 of the Reasons:



Bell claim 16 - Backwards offset NOT accepted by judge

[49] However, the Judge was not convinced that there was sufficient evidence or data to support a prediction with respect to the promised utility of the embodiment of the invention set out in claim 16 of the '787 Patent. That claim provides for an embodiment in which the integrated front cross piece of the landing gear is offset backwards in relation to the front delimitation of the plane of contact of the longitudinal support surfaces of the skids on the ground. That embodiment is illustrated in Figure 11e of the patent, reproduced below:

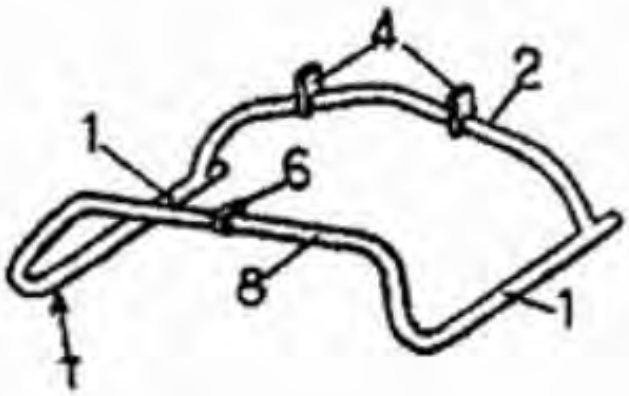

Lessons for SR&ED claimants

- discuss with Ben

SREDStakeholder.CA

What if case happened today

- New tools to search patents & prior art
- Let's examine how to use public information to build prior art review for SR&ED project

SREDStakeholder.CA

Example of recent study 2020

CEAS Aeronautical Journal (2020) 11:731–743
https://doi.org/10.1007/s13272-020-00452-z

ORIGINAL PAPER

Influence of contact points of helicopter skid landing gears on ground resonance stability

Reinhard Lojewski[1] · Christoph Kessler[1] · Rainer Bartels[1]

Received: 25 November 2019 / Revised: 6 March 2020 / Accepted: 8 April 2020 / Published online: 23 April 2020
© The Author(s) 2020

Abstract
Soft-in-plane rotor systems are susceptible to a self-induced vibration phenomenon called ground resonance. This dynamic instability results from lag motions of the rotor blades coupling with airframe degrees of freedom, while the helicopter is in ground contact. As an addition to slope landing studies in the past and investigations of non-linear landing gear effects, this work focuses on a systematic study of partial skid contact. A ground resonance test environment was created. It encompasses

Methods & Issues Explained

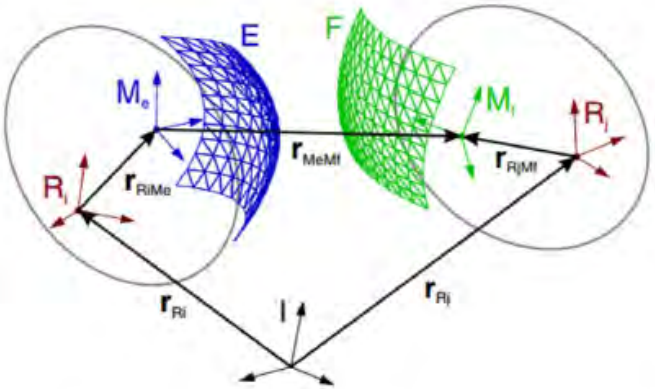

Fig. 13 Intersecting area of the surfaces and corresponding contact patches

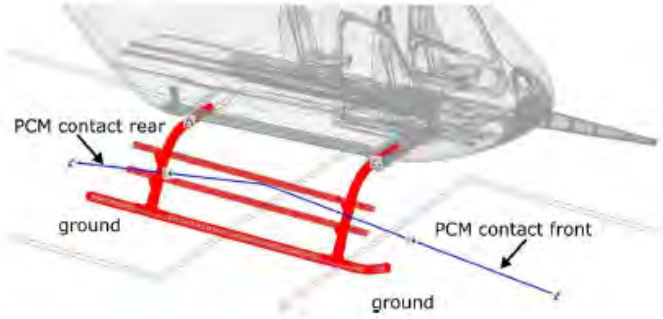

Fig. 14 PCM contact of the EC135 landing gear

without complex a priori consideration, resulting in a straight-forward model setup as seen in Fig. 14.

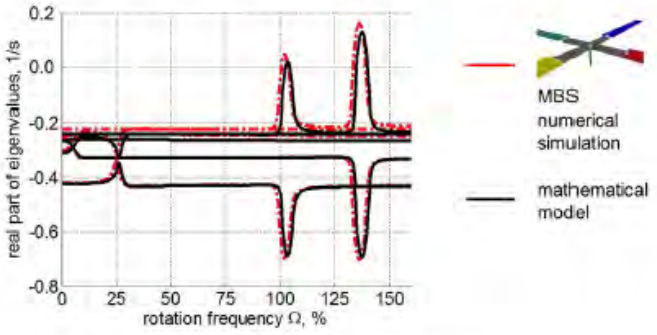

Fig. 15 Hub motion eigenvalues in *x*- and *y*-direction

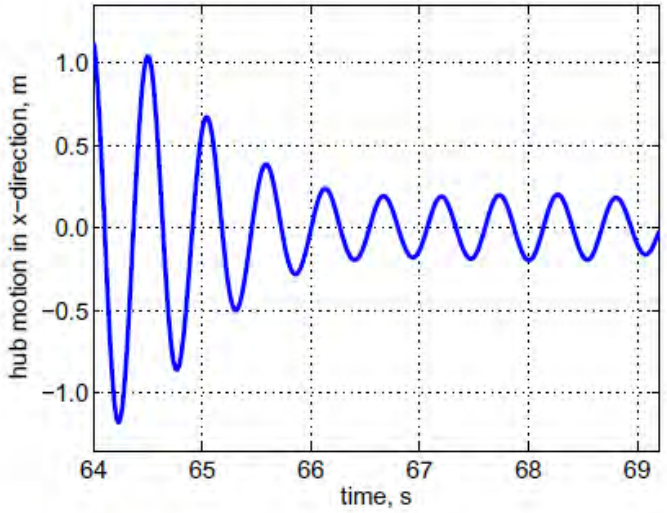

Fig. 16 Filtered sensor measurement of longitudinal hub motion

New models for Ground Resonance

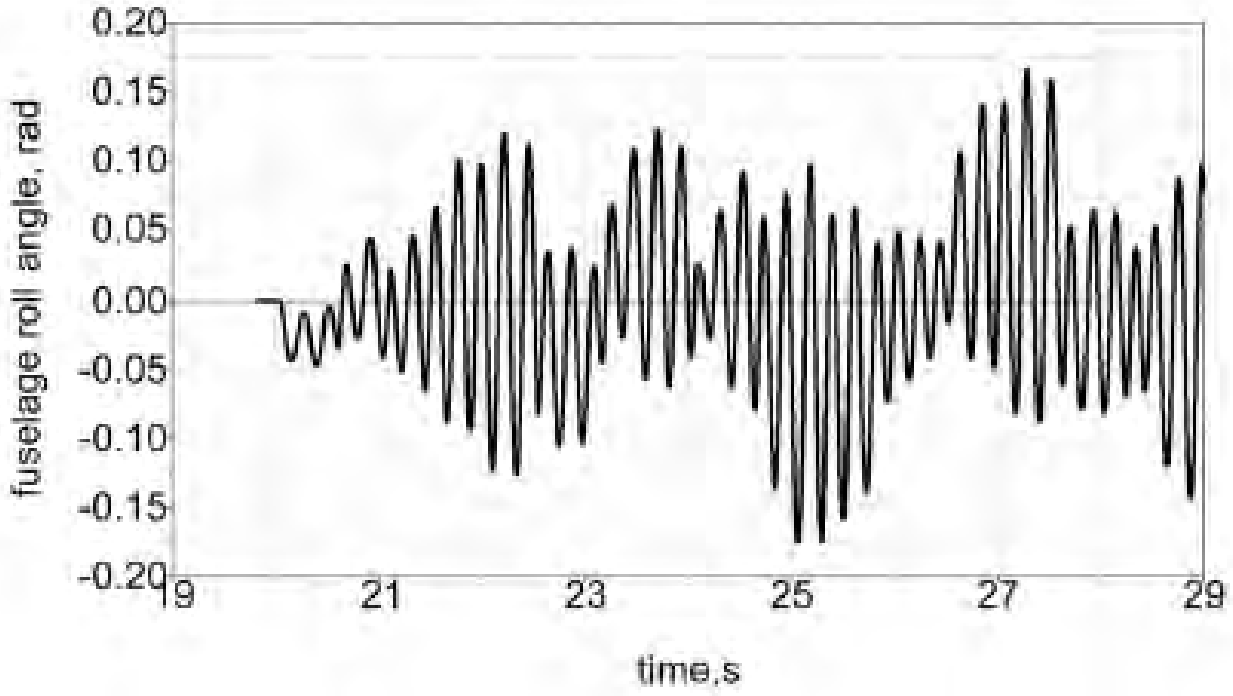

Fig. 27 Roll angle of fuselage and PCM contact in ground resonance

Variability in performance

Table 1 Eigenfrequencies of FHS landing gear modes for fixed boundary conditions

Modes	Fixed attachment (Hz)	Elastic attachment (Hz)	Absolute difference (Hz)	Relative difference
1	18.818	14.810	4.008	−0.213
2	31.171	24.201	6.970	−0.224
3	32.045	26.628	5.417	−0.169
4	33.860	53.819	19.959	+0.589
5	35.764	59.856	24.092	+0.674
6	58.480	60.714	2.234	+0.038
7	62.454	69.958	7.504	+0.120
8	70.166	74.136	3.970	+0.057
9	72.956	78.998	6.042	+0.083
10	75.561	82.237	6.676	+0.088

Technological Uncertainty 2020

It was shown that

- for the modal reduction approach, a special attention has to be given to the landing gears attachment to the fuselage.
- The selection of these “master nodes” is imperative for correct eigenfrequencies and bearing loads.

SREDStakeholder.CA

Eligible SR&ED in 2021?

The study showed signs of two counteracting effects.

- On one hand, reduction of restoring forces should lead to more unstable conditions according to current literature.
- On other hand, energy dissipation shows larger influence on system stability behaviour after sudden disturbance.
  - Especially on soft-terrain like sand or gravel

The second effect is of major interest.

- To investigate these effects tests are necessary.

SRED Stakeholder CA

Structure for systematic investigation

- Current work represents framework for further investigation of this contact type and extensive parameter studies of ground resonance.

SREDStakeholder.CA

Future cases for discussion?

- Lilly v. Novopharm – requirements in defining Standard Practice (2007)
- Bilski – Technological vs. Business advancements in software (2010)

SREDStakeholder.CA

SR&ED cases – TECHNOLOGY Losses

Indusol Industrial Control Ltd. v. The Queen

National R&D Inc. v. The Queen

Presented by

Elizabeth Lance, MA, MASc

Ingenuity Group

Indusol Industrial Control Ltd. v. The Queen (2020)

- Fiscal year 2012, CRA denied SR&ED eligible expenses $111,883 and ITCS $49,224.
- Judge used a two-part test to determine if SR&ED took place and if the expenses were eligible.
- [11] The DIS Project objective was described as being to determine whether it is possible for a vessel to transit from Montreal to Lake Erie (via Lake Ontario and the Welland Canal) consistently at a draft of 8.15 m with a minimum UKC of 30 cm.
- [114] The overall [technological] objective of the DIS implementation specifications was to develop a standard that specified how the UKC of a vessel could be calculated by considering water level, bottom depth and ship dynamics. […]

Indusol's Position

- [6] The DIS Project is an extension of another project, called the "3D-Navigator Electronic Navigation System" (the "3D-Navigator system") project, carried out during previous years by Indusol.
  - Electronic marine navigation system for commercial vessels allows 2D or 3D. DIS part of system.
  - 3D navigation displays the DIS and changes were required.
- [20] Indusol's activities can be classified as either applied research or experimental development within the meaning of the definition of SR&ED.
- Research was published.
- Tested their research on board CSL vessels. Experimental development made incremental improvements to 3D-Navigator system.

CRA position for denial

[24] The DIS Project does not qualify as SR&ED […]

- No evidence was submitted by Indusol regarding the nature of activities.
- Technology was available by 2010.
- Salaries do not qualify as SR&ED expenditures.
  - Claim was filed without documentation or evidence.
  - License and computer not deductible because SR&ED requirements have not been met.

Facts

- The judge reviewed the eligibility using the 5 questions cited in the Northwest Hydraulics Case.
  - 1. Was there a technological risk or uncertainty which could not be removed by routine engineering or standard procedures?
  - 2. Did Indusol formulate hypotheses specifically aimed at reducing or eliminating the technological uncertainty?
  - 3. Did the procedure adopted accord with the total discipline of the scientific method, including the formulation, testing and modification of hypotheses?
  - 4. Did the process result in a technological advancement?
  - 5. Was a detailed record of the hypotheses tested, and results kept as the work progressed?

Question 1 – Technological Uncertainty

- [48] For the reasons stated below, I find that, on a balance of probabilities, only some of the uncertainties raised with respect to the squat issues constitute technological uncertainties within the meaning of the SR&ED criteria. Other uncertainties and challenges identified by the Appellant do not constitute technological risks or uncertainties within the meaning of the SR&ED criteria.

Question 1 – Technological Uncertainty

- [62] The Appellant identified three uncertainties with respect to implementing the squat formulas in the DIS:
  - (1) the speed of a vessel could not be easily measured because there was no solution for measuring the velocity of the current in real time;
  - (2) the squat formula needed to be altered for different sections of the channel; and
  - (3) the additional squat that occurs when two vessels approach each other at different speeds has to be accounted for.

Question 1 – Technological Uncertainty

- 1 – the judge did not find evidence at trial that this uncertainty could not be resolved using routine engineering or standard practice.
- 2 – The judge ruled that “there was no technological uncertainty within the meaning of the SR&ED criteria, because I am not satisfied that the uncertainty could not be resolved using routine engineering or standard procedures”.
  - The formulas developed in 2002 took into account different channel types.
- 3 – The judge ruled there was a technological uncertainty within the meaning of SR&ED.

Question 1 – Technological Uncertainty

- The judge ruled there were not uncertainties within the meaning of SR&ED regarding:
  - User interface and the display requirement issues
  - Water level information issues
  - Communication issues
  - Deciding what alarms to display
    - Considered this an admin decision
  - Alarm and alert issues
  - Data recording
  - Determining whether a computer was fast or reliable enough for their purposes – computer hardware issues

SREDstakeholder.CA

Question 2 – Hypotheses

- [93] On the evidence adduced at trial, I find that, on a balance of probabilities, hypotheses were formulated that were designed to reduce or eliminate the technological uncertainties involved with respect to the squat issues. However, for the reasons explained below in the section dealing with the third criterion, I am not convinced that Indusol conducted a methodical and systematic testing of the hypotheses. Accordingly, I find that the second criterion is not met, as it requires the methodical and systematic testing of hypotheses.

Question 3 – Scientific Method

- The judge ruled Indusol did produce sufficient evidence that the scientific method was followed.
- Results and descriptions of tests were vague.
- No information on testing presented.
- [101] […] no evidence as to whether systematic observation, measurement, and experiment were performed with a view to modifying the proposed solution which led to the final solution.

Question 3 – Scientific Method

- [102] For these reasons, I am not convinced that the procedure adopted by Indusol accorded with the total discipline of the scientific method. The Appellant simply did not adduce sufficient evidence to meet this criterion. Therefore, for these reasons, I find that, on a balance of probabilities, the third criterion is not met.

Question 4 – Technological Advancement

- [107] […] the evidence suggests that much of the work to advance the technology was completed by 2010, and only part of the implementation of the squat formulas qualifies as involving a technological uncertainty within the meaning of the SR&ED criteria in the 2012 taxation year. I find that some incremental advancements were achieved in the 2012 taxation year in relation to the DIS, but no advancement within the meaning of the SR&ED criteria. A technological advancement for SR&ED purposes requires the removal of technological uncertainties through a process of systematic investigation. As the Appellant has not adduced sufficient evidence to demonstrate that systematic investigation was undertaken during the 2012 taxation year, I simply cannot conclude that this criterion is met.

Question 5 – Detailed Record

- 2 documents were provided – implementation specifications and DIS conformance tests.
- [113] After examining these two documents, I find that they are not contemporaneous detailed records of the hypotheses formulated and tests performed by Indusol; in other words, they are not records such as those described in Northwest Hydraulic.
  - No evidence of hypotheses being tested or test results.

Salary or Wages

- The judge examined the salary and wages to determine IF he had ruled the project was SR&ED eligible would the expenses also be eligible.
- He determined the salaries for Mr. van Eijle and Ms. Clement would not qualify.
  - Ms. Clement was not directly engaged (proofreading documents, driving Mr. van Eijle).
  - No documentation to support they were directly engaged in SR&ED (ie. timesheets, logs, agendas, records, meeting minutes, etc.)
  - Documentation was requested by the CRA in February 2013. The CRA would have accepted emails as documentation.

Computer

- Capital expenditure (prior to 2014 costs are eligible) means all or substantially all used in prosecution of SR&ED.
  - Computer was tested for durability.
  - No evidence provided of computer's use or context.
- The judge ruled the computer was not an eligible expenditure as Indusol did not provide evidence of its use.

License

- Expenditure of a current nature – materials consumed in prosecution of SR&ED
  - Subscription to company which Indusol used to program development software.
- The judge ruled the license could not be considered material as it is not form which something is made.
- The judge ruled that it could be considered a capital expenditure had the project qualified as SR&ED.

Results - LOSS

- Judge ruled that project did not constitute SR&ED.
- The appeal was dismissed.
- Costs to the Respondent.

SRED Stakeholder.CA

Lessons

- The Appellant was unable to prove they had identified a technological uncertainty and sought to reduce or eliminate that uncertainty through experimentation or analysis in all of their projects.
- It is vital to show how the uncertainties, or gaps in the knowledge base, could not be resolved using routine engineering practices.
- Using the scientific method can be a determining factor if a project is or is not SR&ED eligible.

National R&D Inc. v. The Queen

- Background
  - National R&D is a consultant in the areas of engineering, information technology, SR&ED tax credits, and Ontario interactive digital media tax credits
  - F2011 SR&ED ITCs were denied totaling $23,810.
  - Project titled “Project Tracking System”

National R&D's Position

- State their project was undertaken for the purpose of a technological advancement.
- Argued sufficient due diligence done and evidence provided.
- Illustrated a technological uncertainty, formed hypotheses for the reduction or elimination of the technological uncertainties, followed the scientific method, and kept detailed records.
- Witness – Mr. Saini the CEO and sole shareholder.

CRA position for denial

- Project does not constitute SR&ED.
- National did not meet its burden in showing on a balance of probabilities the project involved technological uncertainty and technological advancement.
- Little knowledge base research.
- Routine engineering could have been used.
- Witness for National R&D not credible.

PTS Project Objectives

- [22] The first phase of the PTS Project, which was carried out during the 2011 taxation year, involved establishing an efficient and concise time-tracking system, and it had three sub-objectives (hereinafter collectively referred to as the “Objectives”):
  - 1. To develop techniques for record set paging, sorting, and indexing that were compatible with the MTA (“Objective 1”);
  - 2. To develop a mechanism for in-memory array initialization of joint record sets such as “pivot-like output” (“Objective 2”); and
  - 3. To develop methods for deterministic and stateful client-side control (“Objective 3”).

Facts

- The judge reviewed the eligibility using the 5 questions cited in the C.W. Agencies case.
  - 1. Was there a technological risk or uncertainty which could not be removed by routine engineering or standard procedures?
  - 2. Did the person claiming to be doing SRED formulate hypotheses specifically aimed at reducing or eliminating that technological uncertainty?
  - 3. Did the procedure adopted accord with the total discipline of the scientific method including the formulation[,] testing and modification of hypotheses?
  - 4. Did the process result in a technological advancement?
  - 5. Was a detailed record of the hypotheses tested, and results kept as the work progressed?

Question 1 – Technological Uncertainty

- No web-based program for time tracking SR&ED projects (at that time).
- Internet search done for knowledge base of the objectives.
- The judge ruled that there were technological uncertainties which could not be resolved using routine engineering or standard procedures.
  - Objectives were specific, constraints to system, and system uncertainty.
  - Resolution of the uncertainties not reasonably predictable.

Question 2 – Hypotheses

- [47] Given the testimony of Mr. Saini and the documents referred to above and adduced in evidence at the hearing, I find, on a balance of probabilities, that National did formulate hypotheses specifically aimed at reducing or eliminating the technological uncertainties raised by the PTS Project. However, as indicated below under the analysis of the third criterion, Mr. Saini failed to convince me, on a balance of probabilities, that methodical and systematic testing of the hypotheses was conducted by National. Accordingly, the second criterion is not met as it requires the methodical and systematic testing of the hypotheses.

Question 3 – Scientific Method

- Project Timeline
  - Judge ruled the document does not show the formulation, testing, and modification of the hypotheses.
  - He also ruled there no logical progression between entries.
- The Letter
  - Objective 1 - specifies hypotheses and 50 experiments.
  - Objective 2 – states experiment were done but no details.
  - Objective 3 – hypotheses and vague description of how the objective was achieved.
  - Judge ruled what was being tested was unclear, how testing was done was not clear, results were vague, and no references to testing or modifying the hypotheses.

Question 3 – Scientific Method

- Source Code
  - Jude was unable to determine which version of source code was provided.
  - National R&D said there were other versions of code not presented.
  - No explanations regarding how or why code was altered.
- [58] As a result, I am not convinced, on a balance of probabilities, that National followed the scientific method while carrying out the activities in respect of the PTS Project. I therefore find that this criterion is not met.

Question 4 – Technological Advancement

- [64] I find Mr. Saini's testimony credible on this point. As a result, I find that there was some technological advancement in relation to the Objectives of the PTS Project, but not advancement within the meaning of the definition of SR&ED. As mentioned above, in order to find that a technological advancement was achieved, I would have to first find that technological uncertainties were removed through a process of systematic investigation, which I do not. Having concluded that National did not carry out systematic investigation to remove technological uncertainties, I cannot find that this criterion is met.

Question 5 – Detailed Record

- Project Timeline – judge ruled this did not show the formulation, testing or modification of any hypothesis. It also does not show experimentation or results.
- Document – does not show testing, it is breakdown of time spent on tasks.
- Source code – if a revision history had been submitted it may have been possible to determine tests. Judge ruled no advancement presented.

Question 5 – Detailed Record

- [72] As a result, I cannot conclude that any of the documents provided by National can be considered contemporaneous documentation that details any of the tests and the results of those tests.
- Testimony provided was not sufficient to make up for lack of documentary evidence.

Results - LOSS

- The judge ruled that the project did not constitute SR&ED.
- Appeal was dismissed.
- Costs to the Respondent.

SREDStakeholder.CA

Lessons

- The format for the Plan, Develop, Conclude/Correct, Act (PDCA) alone does not satisfy the definition of the scientific method.
- Detailed records of the meetings, the hypotheses, and tests are needed to help satisfy the definition.
- To be eligible for SR&ED Investment Tax Credits (ITCs), work must be approached through a systematic investigation where hypotheses formed using the existing knowledge base are tested through experimentation and analysis and documentation is kept throughout the process.

Section IV

SR&ED Statistics & Covid-19 effects

SREDStakeholder.CA

Webcast Mar. 25, 2021

Presented by

Justin Frape, HBA

©Note: All content may be reproduced as long as it acknowledges the source

2021 ITC's BACK TO 2014 LEVEL

SR&ED claims processed			Variance		
Year	Claims	ITC's ('000's)	Claims	ITC's	
2021	**19,783**	**$4,277,011**	0.96%	40.38%	**11 months**
2020	**19,595**	**$3,046,754**	-0.20%	-5.40%	
2019	19,632	$3,219,591	-1.10%	1.30%	
2018	19,855	$3,177,717	-4.80%	-1.70%	
2017	20,867	$3,231,128	-8.60%	-18.80%	
2016	22,839	$3,979,168	-6.00%	-5.50%	
2015	24,302	$4,211,057	-4.00%	-3.50%	
2014	**25,312**	**$4,361,819**	-11.20%	16.50%	
2010	28,518	$3,743,200	27.50%	-8.30%	
2007	22,370	$4,081,256			
	2014 to 2020 changes		**-22.60%**	**-30.10%**	
	2014 to 2021 changes		**-21.84%**	**-1.94%**	

Source: CRA Redbook

CRA SR&ED Red book
Mar 31, 2020 vs. Feb 28, 2021

SR&ED claim intake	Year end Mar 31, 2020		11 mo end Feb 28, 2021		Variance 2020-2021	
	Claims	ITC's	Claims	ITC's	Claims	ITC's
National	19,959	$3,046,754	19,783	$4,277,011	-0.9%	40.4%
Refundable (35%)	12,069	$1,363,208	12,615	$1,655,299	4.5%	21.4%
Refundable TPR (35%)	2,805	$149,665	3,319	$211,037	18.3%	41.0%
Non-Refundable (15%)	3,466	$1,142,062	2,617	$1,902,907	-24.5%	66.6%
Non-Refundable TPR (1	1,424	$311,680	1,101	$365,157	-22.7%	17.2%
Other	195	$80,138	131	$142,610	-32.8%	78.0%
	19,959		19,783			

Source: CRA Redbook

Total increase of $1.23 Billion from 2020 to 2021.
Significant increase to all claimant types.
$760 million to non-refundable claimants (66% over 2020 & 62% total increase)
Despite number of claims in category down 24.5%

Taking a deeper look

- Next 4 slides – SR&ED review results by region
- Comparison of 2020 vs. 2021
- Indicates 2021 reviews roughly ½ of those in 2020
- Assessment times from 103 to 64 days
- Avg. adjustments 23% to 12% if reviewed
- If review timing likely around 1 year

SREDStakeholder.CA

Processing Outcomes Apr.1, 2019 to Mar. 31, 2020				ITC / CII		
	Processing Type	Processed Claims	Percent of total processed claims by review type	ITC Claimed ($, 000s)	ITC Allowed ($, 000s)	ITC Adjusted ($, 000s)
Atlantic	Coordinated Desk Review	8	1.2%	$1,852	$1,647	$205
	Coordinated On-site Review	96	14.3%	$16,986	$9,399	$7,587
	All Coordinated Reviews	104	15.5%	$18,839	$11,047	$7,792
	Total	673	100.0%	$63,917	$55,813	$8,104
Québec	Coordinated Desk Review	105	2.0%	$50,909	$47,421	$3,488
	Coordinated On-site Review	884	16.7%	$157,621	$124,369	$33,252
	All Coordinated Reviews	989	18.7%	$208,530	$171,790	$36,740
	Total	5290	100.0%	$792,814	$753,924	$38,890
Ontario Centre	Coordinated Desk Review	72	1.4%	$18,015	$13,422	$4,592
	Coordinated On-site Review	561	11.2%	$312,490	$234,426	$78,064
	All Coordinated Reviews	633	12.6%	$330,505	$247,848	$82,656
	Total	5007	100.0%	$977,425	$884,846	$92,579
Ontario West	Coordinated Desk Review	25	0.6%	$10,996	$10,303	$693
	Coordinated On-site Review	496	12.5%	$121,151	$95,182	$25,969
	All Coordinated Reviews	521	13.1%	$132,147	$105,485	$26,662
	Total	3971	100.0%	$622,392	$587,408	$34,984
Prairies	Coordinated Desk Review	28	1.2%	$5,912	$5,521	$390
	Coordinated On-site Review	446	19.5%	$165,680	$113,014	$52,666
	All Coordinated Reviews	474	20.7%	$171,592	$118,535	$53,057
	Total	2287	100.0%	$400,731	$345,559	$55,173
Pacific	Coordinated Desk Review	30	1.1%	$28,753	$27,689	$1,065
	Coordinated On-site Review	325	11.9%	$72,151	$60,211	$11,940
	All Coordinated Reviews	355	13.0%	$100,905	$87,900	$13,005
	Total	2731	100.0%	$433,093	$419,204	$13,889
All Canada/Tout le Canada	Coordinated Desk Review	268	1.3%	$116,437	$106,004	$10,433
	Coordinated On-site Review	2808	14.1%	$846,079	$636,602	$209,477
	All Coordinated Reviews	3076	15.4%	$962,516	$742,605	$219,911
	Total	19959	100.0%	$3,290,372	$3,046,754	$243,618

Processing April 1, 2020 to February 26, 2021

	Processing Type	Processed Claims	Percent of total processed claims by review type	ITC / CII ITC Claimed ($, 000s)	ITC Allowed ($, 000s)	ITC Adjusted ($, 000s)
Atlantic	Coordinated Desk Review	13	2.1%	$1,768	$1,658	$109
	Coordinated On-site Review	23	3.8%	$4,472	$3,154	$1,318
	All Coordinated Reviews	36	5.9%	$6,240	$4,813	$1,427
	Total	612	100.0%	$70,005	$68,528	$1,477
Québec	Coordinated Desk Review	115	2.3%	$307,878	$298,575	$9,304
	Coordinated On-site Review	318	6.2%	$447,880	$391,716	$56,164
	All Coordinated Reviews	433	8.5%	$755,758	$690,290	$65,468
	Total	5098	100.0%	$1,738,968	$1,666,696	$72,272
Ontario Centre	Coordinated Desk Review	120	2.4%	$19,134	$13,614	$5,520
	Coordinated On-site Review	100	2.0%	$30,549	$22,852	$7,697
	All Coordinated Reviews	220	4.5%	$49,683	$36,466	$13,217
	Total	4912	100.0%	$815,239	$800,000	$15,239
Ontario West	Coordinated Desk Review	139	3.7%	$56,485	$52,368	$4,117
	Coordinated On-site Review	273	7.2%	$150,407	$115,486	$34,921
	All Coordinated Reviews	412	10.8%	$206,892	$167,854	$39,038
	Total	3806	100.0%	$801,679	$762,006	$39,673
Prairies	Coordinated Desk Review	53	2.2%	$14,041	$13,276	$764
	Coordinated On-site Review	204	8.6%	$111,634	$94,919	$16,714
	All Coordinated Reviews	257	10.8%	$125,674	$108,195	$17,479
	Total	2371	100.0%	$531,326	$505,153	$26,173
Pacific	Coordinated Desk Review	60	2.0%	$10,265	$7,974	$2,291
	Coordinated On-site Review	114	3.8%	$22,165	$19,260	$2,905
	All Coordinated Reviews	174	5.8%	$32,430	$27,234	$5,196
	Total	2984	100.0%	$480,778	$474,628	$6,150
All Canada/Tout le Canada	Coordinated Desk Review	500	2.5%	$409,570	$387,464	$22,106
	Coordinated On-site Review	1032	5.2%	$767,107	$647,387	$119,720
	All Coordinated Reviews	1532	7.7%	$1,176,677	$1,034,852	$141,825
	Total	19783	100.0%	$4,437,995	$4,277,011	$160,985

April 1, 2019 to March 31, 2020

	Processing Type	Adjustment Rate: Overall % ITC Adjusted	Average Days / Average Total Days	Hours / Heures: Avg RTA Hours	Avg FR Hours	Avg Total Hours
Atlantic	Coordinated Desk Review	11.1%	918	30	41	71
	Coordinated On-site Review	44.7%	475	54	68	122
	All Coordinated Reviews	41.4%	509	52	66	118
	Total	12.7%	119	10	13	23
Québec	Coordinated Desk Review	6.9%	338	30	27	57
	Coordinated On-site Review	21.1%	359	54	38	93
	All Coordinated Reviews	17.6%	357	52	37	89
	Total	4.9%	99	11	8	20
Ontario Centre	Coordinated Desk Review	25.5%	372	37	32	69
	Coordinated On-site Review	25.0%	576	69	53	122
	All Coordinated Reviews	25.0%	553	66	50	116
	Total	9.5%	134	11	9	20
Ontario West	Coordinated Desk Review	6.3%	299	20	20	40
	Coordinated On-site Review	21.4%	418	65	48	113
	All Coordinated Reviews	20.2%	412	63	47	109
	Total	5.6%	99	11	8	19
Prairies	Coordinated Desk Review	6.6%	240	19	21	39
	Coordinated On-site Review	31.8%	276	57	51	108
	All Coordinated Reviews	30.9%	274	55	49	104
	Total	13.8%	97	13	13	26
Pacific	Coordinated Desk Review	3.7%	238	22	18	40
	Coordinated On-site Review	16.5%	281	60	45	105
	All Coordinated Reviews	12.9%	277	57	43	100
	Total	3.2%	64	9	7	16
All Canada/Tout le Canada	Coordinated Desk Review	9.0%	339	29	26	55
	Coordinated On-site Review	24.8%	395	60	47	107
	All Coordinated Reviews	22.8%	390	58	45	102
	Total	7.4%	103	11	9	20

April 1, 2020 to February 26, 2021

	Processing Type	Adjustment Rate / Taux Overall % ITC Adjusted	Average Days / Average Total Days	Hours / Heures Avg RTA Hours	Avg FR Hours	Avg Total Hours
Atlantic	Coordinated Desk Review	6.2%	193	38	35	73
	Coordinated On-site Review	29.5%	306	59	55	113
	All Coordinated Reviews	22.9%	265	51	48	99
	Total	2.1%	63	5	6	12
Québec	Coordinated Desk Review	3.0%	383	30	28	58
	Coordinated On-site Review	12.5%	446	76	56	132
	All Coordinated Reviews	8.7%	429	64	48	112
	Total	4.2%	77	7	6	13
Ontario Centre	Coordinated Desk Review	28.8%	223	55	58	113
	Coordinated On-site Review	25.2%	403	81	66	147
	All Coordinated Reviews	26.6%	305	67	62	128
	Total	1.9%	51	5	5	10
Ontario West	Coordinated Desk Review	7.3%	218	35	31	66
	Coordinated On-site Review	23.2%	379	67	52	119
	All Coordinated Reviews	18.9%	325	56	45	101
	Total	4.9%	78	8	6	14
Prairies	Coordinated Desk Review	5.4%	183	47	44	92
	Coordinated On-site Review	15.0%	258	56	50	106
	All Coordinated Reviews	13.9%	243	54	49	103
	Total	4.9%	68	8	7	15
Pacific	Coordinated Desk Review	22.3%	199	51	44	95
	Coordinated On-site Review	13.1%	277	55	47	102
	All Coordinated Reviews	16.0%	250	54	46	99
	Total	1.3%	45	5	5	10
All Canada/Tout le Canada	Coordinated Desk Review	5.4%	250	42	40	82
	Coordinated On-site Review	15.6%	365	68	54	121
	All Coordinated Reviews	12.1%	328	59	49	108
	Total	3.6%	64	6	6	12

Advisory Service Results and Check-offs for the period April 1, 2019 to March 31, 2020

	Pre-Claim Consultation			Pre-Claim Review			Check-offs
	Opened during the period	Processed during the period	Inventory	Opened during the period	Processed during the period	Inventory	Processed during the period
Atlantic	10	9	4	0	0	0	142
Québec	40	34	18	0	0	1	5
Ontario Centre	41	54	13	0	0	0	405
Ontario West	32	33	8	1	2	8	951
Prairies	22	27	7	0	0	0	3,215
Pacific	71	67	15	1	3	0	8
All Canada/Tout le Canada	216	224	65	2	5	9	4,726

SREDStakeholder.CA

Advisory Service Results and Check-offs for the period April 1, 2020 to February 26, 2021

	Pre-Claim Consultation			Pre-Claim Review			Check-offs
	Opened during the period	Processed during the period	Inventory	Opened during the period	Processed during the period	Inventory	Processed during the period
Atlantic	8	12	2	0	0	0	125
Québec	25	35	5	0	1	0	4
Ontario Centre	31	33	11	0	0	1	350
Ontario West	14	16	6	0	8	0	895
Prairies	26	28	5	0	0	0	3,294
Pacific	33	36	12	0	0	0	8
All Canada	137	160	41	0	9	1	4,676

SR&ED - Effects of COVID-19

SREDStakeholder.CA

What's new – SR&ED Program

This Scientific Research and Experimental Development (SR&ED) Program "What's new" page is organized by date. For information listed by year and by topic, go to the SR&ED Program archives.

[2021-02-19]

The Guidance: How the Canada emergency wage subsidy affects SR&ED claims is now available to help SR&ED claimants, who are also Canadian emergency wage subsidy (CEWS) recipients, determine how the CEWS might affect their SR&ED claim.

Example of the Canada emergency wage subsidy applied to an SR&ED claim

CEWS received for the SR&ED employees

Employees	Total salary (12-week period) a)	Total CEWS (12-week period) b)
Sarah	$16,800	$10,164
Jamaal	$8,400	$6,300
Total	$25,200	$16,464

SREDStakeholder.CA

SR&ED salary calculation

SR&ED employees	SR&ED % time spent c)	Total SR&ED salary (12-week period) a)* c)	Total CEWS earned for SR&ED b)* c)	Net SR&ED salary
Sarah	100%	$16,800	$10,164	$6,636
Jamaal	30%	$2,520	$1,890	$630
Total		$19,320	$12,054	$7,266

Form T661	Traditional method	Proxy method
SR&ED portion of salaries or wages of employees directly engaged in the SR&ED	$16,800	$16,800
Overhead and other expenditures	$ 2,520	-
Total allowable expenditures	$19,320	$16,800
Less: government assistance (CEWS)	$12,054	$10,164
Pool of deductible SR&ED expenditures	**$7,266**	**$6,636**
Total allowable expenditures	$19,320	$16,800
Add: prescribed proxy amount (55%* SR&ED portion of salaries or wages of employees directly engaged in the SR&ED)	-	$9,240
Less: government assistance (CEWS)	$12,054	$12,054
Qualified expenditures	**$7,266**	**$13,986**

SR&ED planning
New tax court procedures

SREDStakeholder.CA

Presented by

Angela Salvatore, LLM

Rogerson Law Group

Tax Court procedures for SR&ED

- Slides for this section still pending at Mar 24, 2021
- Please download at
- https://sredstakeholder.ca/mar-25-2021-sredstakeholder-pdf-handouts/

SREDStakeholder.CA